204 2Z FAG

Deep groove ball bearings

TYPE: Ball bearings, Radial ball bearings, Single row, With filling slot, Shields 2Z

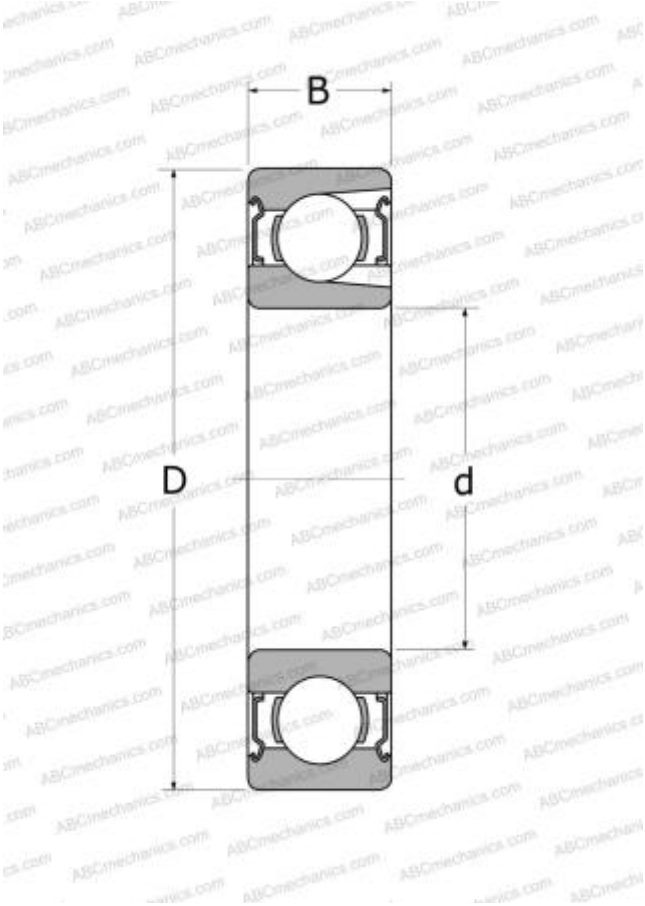

Technical specification

DIMENSIONS, MM	
d	20,000
D	47,000
B	14,000
WEIGHT, KG	0,145
MANUFACTURER	FAG
INTERCHANGE	
ABC	204 2Z
MRC	204-MFF
FEDERAL/SCHA TZ	1204MFF