3200 A 2RS1 ABC

Angular contact ball bearings

TYPE: Ball bearings, Angular contact ball bearing, Double row, Contact angle 30°, Lip seals on both side

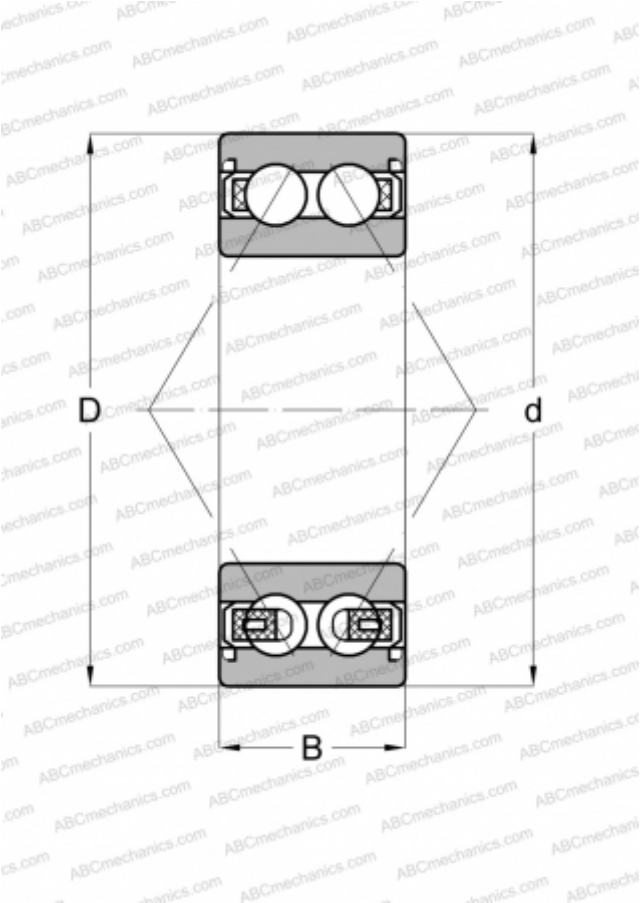

Technical specification

DIMENSIONS, MM	
d	10,000
D	30,000
B	14,000
WEIGHT, KG	0,051
MANUFACTURER	ABC
INTERCHANGE	
SKF	3200 A-2RS1