3302 BD 2RSR TVH FAG

Angular contact ball bearings

TYPE: Ball bearings, Angular contact ball bearing, Double row, Contact angle 30°, Lip seals on both side

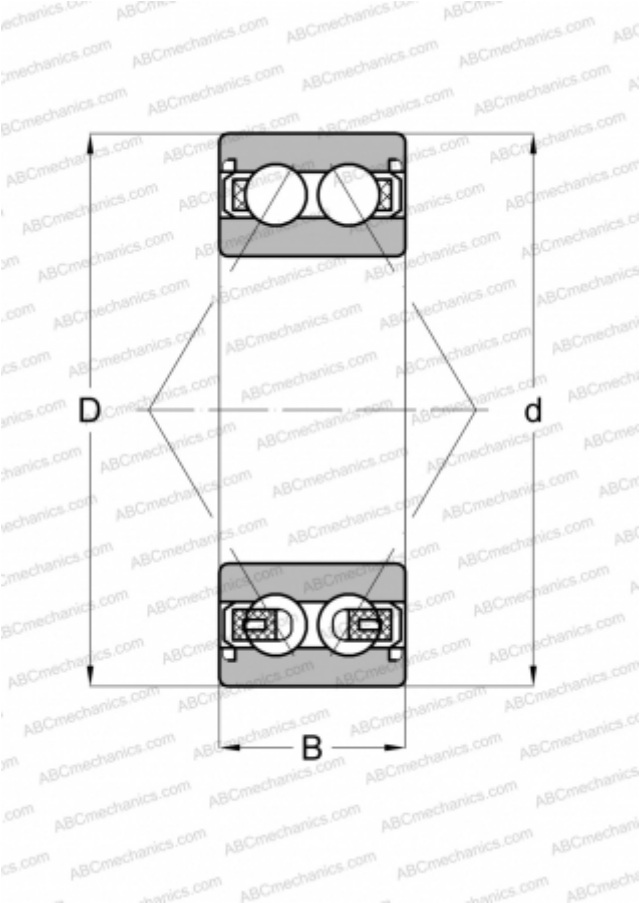

Technical specification

DIMENSIONS, MM	
d	15,000
D	42,000
B	19,000

WEIGHT, KG	0,122
MANUFACTURER	FAG

INTERCHANGE	
ABC	3302 BD 2RSR TVH
SKF	3302 A-2RS1