3202 BD 2Z TVH FAG

Angular contact ball bearings

TYPE: Ball bearings, Angular contact ball bearing, Double row, Contact angle 30°, Gap seals on both side

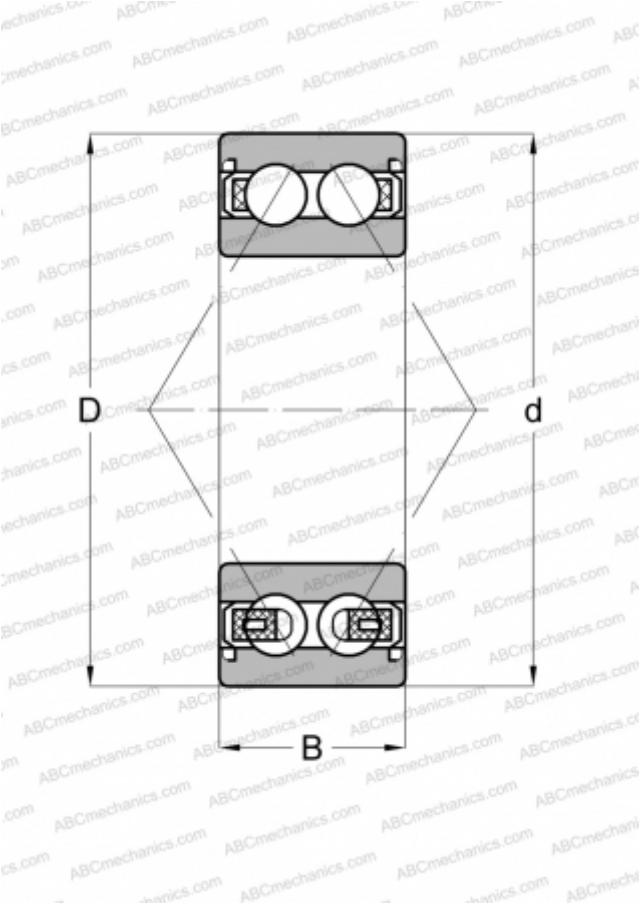

Technical specification

DIMENSIONS, MM	
d	15,000
D	35,000
B	15,900
WEIGHT, KG	0,067
MANUFACTURER	FAG
INTERCHANGE	
ABC	3202 BD 2Z TVH
SKF	3202 A-2Z