2205 E-2RS1KTN9 SKF

Self-aligning ball bearings

TYPE: Ball bearings, Radial ball bearings, Double row, spherical, With tapered bore, With adapter sleeve, seals 2RS

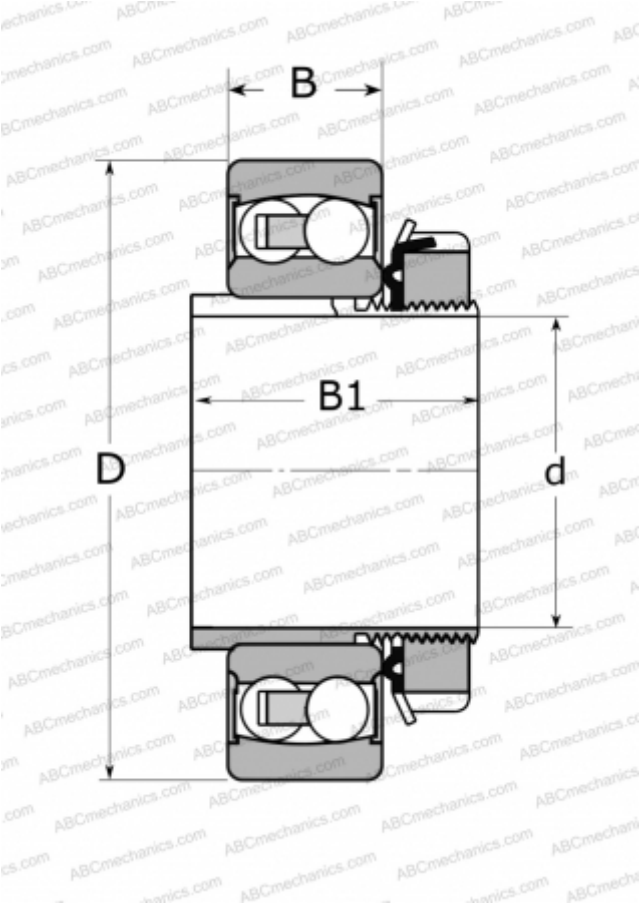

Technical specification

DIMENSIONS, MM	
d	20,000
D	52,000
B	18,000
B1	29,000
WEIGHT, KG	0,230
MANUFACTURER	SKF

CALCULATION DATA	
Basic dynamic load rating, C	14,300 kN
Basic static load rating, Co	4,000 kN
Fatigue load limit, Pu	0,210 kN
Limiting speed	9000 r/min

ASSOCIATED PRODUCTS

H 305 C