30308T72J2/QDBC220 SKF

Tapered roller bearings

TYPE: Roller bearings, Tapered, Single row, matched bearings, Back-to-back (SKF)

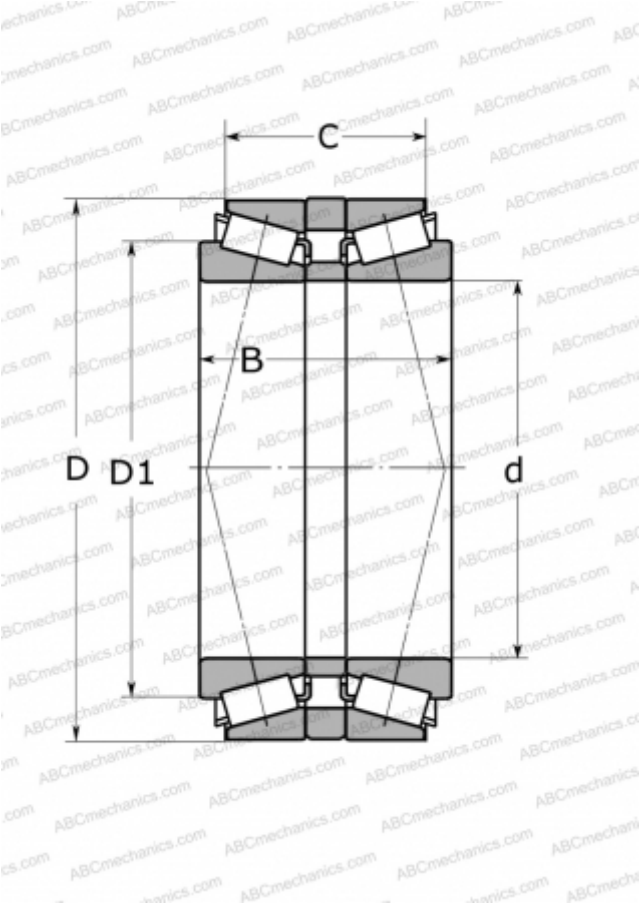

Technical specification

DIMENSIONS, MM	
d	40,000
D	90,000
D1	62,500
B	72,000
C	61,500

WEIGHT, KG	1,900
MANUFACTURER	SKF

CALCULATION DATA	
Basic dynamic load rating, C	147,000 kN
Basic static load rating, Co	190,000 kN
Fatigue load limit, Pu	21,600 kN
Reference speed	4800 r/min
Limiting speed	8000 r/min