YAR 203/12-2F SKF

Insert bearings

TYPE: Ball bearings, Radial insert bearings, Grub screw to inner ring, Spherical outer ring, Series YAR, NBR contact seal and additional plain flinger on both sides (SKF)

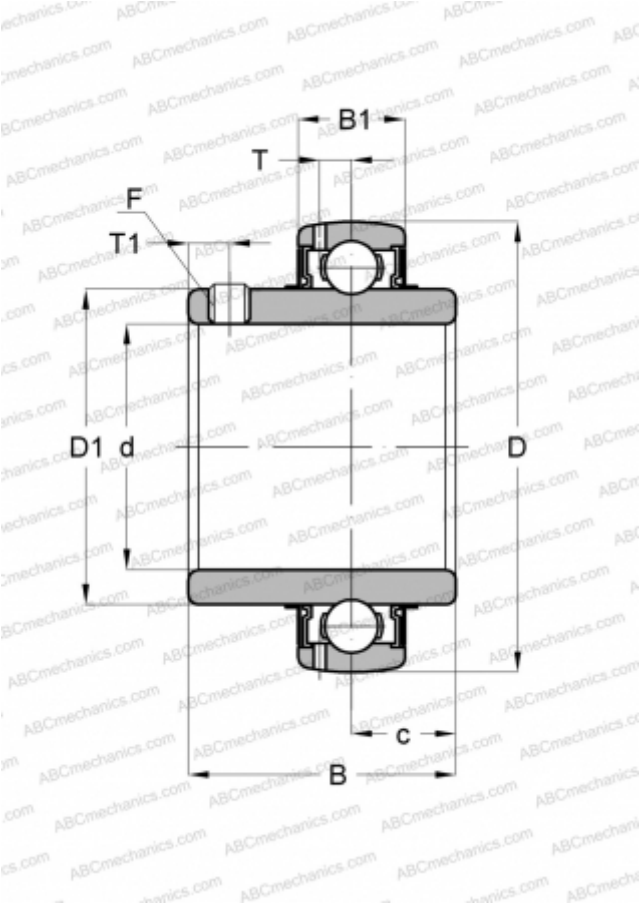

Technical specification

DIMENSIONS, MM	
d	12,000
D	40,000
D1	24,200
B	27,400
C	12,000

WEIGHT, KG	0,110
MANUFACTURER	SKF

CALCULATION DATA	
Basic dynamic load rating, C	9,560 kN
Basic static load rating, Co	4,750 kN
Fatigue load limit, Pu	0,200 kN
Limiting speed	9500 r/min