YAR 210-2F SKF

Insert bearings

TYPE: Ball bearings, Radial insert bearings, Grub screw to inner ring, Spherical outer ring, Series YAR, NBR contact seal and additional plain flinger on both sides (SKF)

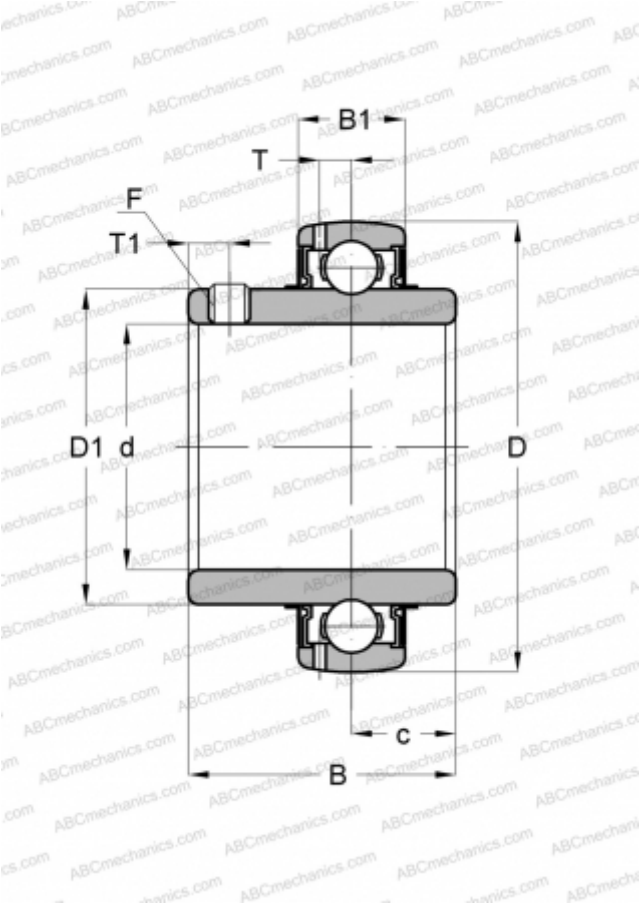

Technical specification

DIMENSIONS, MM	
d	50,000
D	90,000
D1	62,500
B	51,600
C	22,000

WEIGHT, KG	0,690
MANUFACTURER	SKF

CALCULATION DATA	
Basic dynamic load rating, C	35,100 kN
Basic static load rating, Co	23,200 kN
Fatigue load limit, Pu	0,980 kN
Limiting speed	4000 r/min