YARAG 209 SKF

Insert bearings

TYPE: Ball bearings, Radial insert bearings, Grub screw to inner ring, Spherical outer ring, Series YARAG, for agricultural applications (SKF)

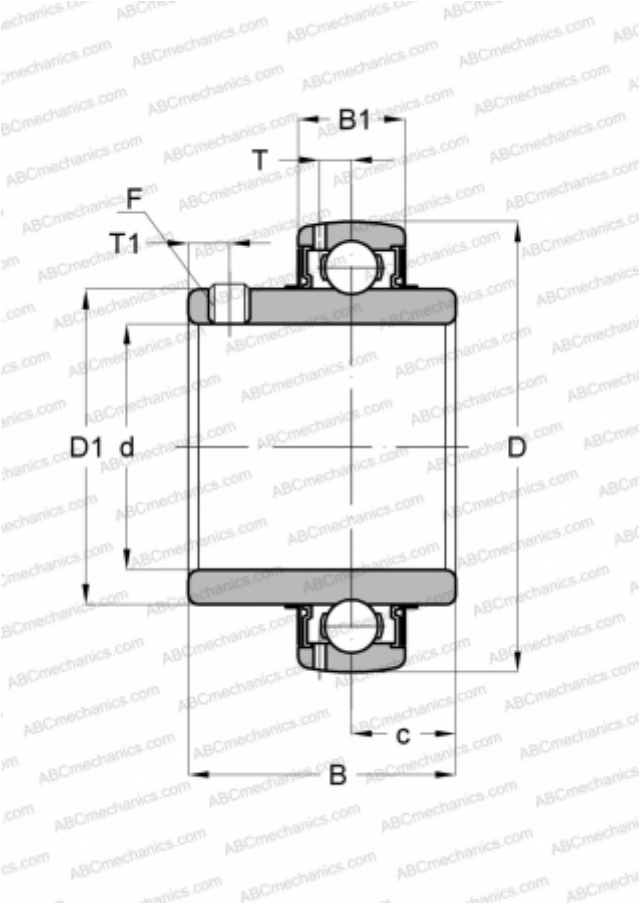

Technical specification

DIMENSIONS, MM	
d	45,000
D	85,000
D1	56,800
B	49,200
C	22,000

WEIGHT, KG	0,660
MANUFACTURER	SKF

CALCULATION DATA	
Basic dynamic load rating, C	33,200 kN
Basic static load rating, Co	21,600 kN
Fatigue load limit, Pu	0,915 kN
Limiting speed	850 r/min