YAT 208 SKF

Insert bearings

TYPE: Ball bearings, Radial insert bearings, Grub screw to inner ring, Spherical outer ring, Series YAT (SKF)

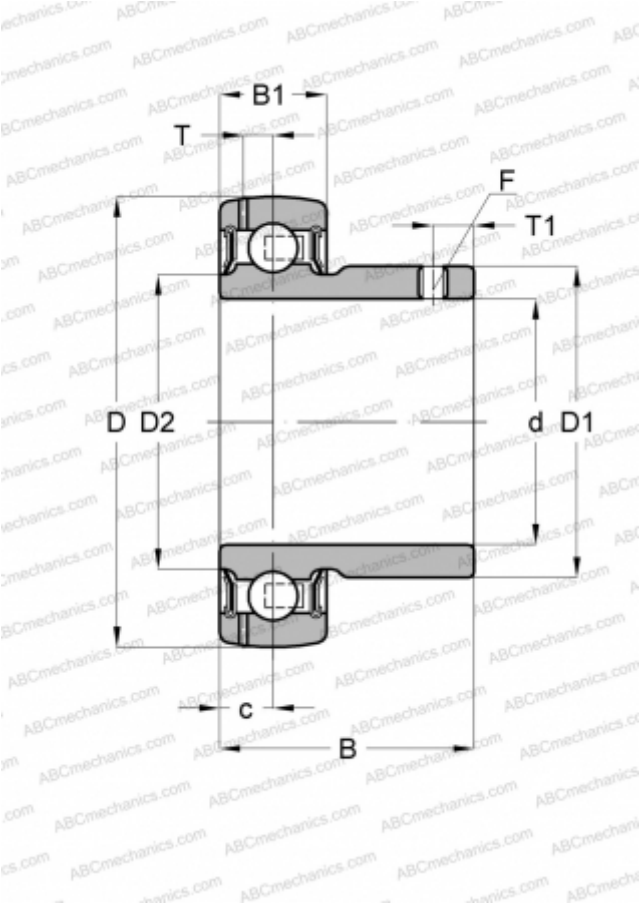

Technical specification

DIMENSIONS, MM	
d	40,000
D	80,000
D1	51,800
B	36,000
B1	21,000

WEIGHT, KG	0,430
MANUFACTURER	SKF

CALCULATION DATA	
Basic dynamic load rating, C	30,700 kN
Basic static load rating, Co	19,000 kN
Fatigue load limit, Pu	0,800 kN
Limiting speed	4800 r/min