YAR 207-104-2RF/HV SKF

Insert bearings

TYPE: Ball bearings, Radial insert bearings, Grub screw to inner ring, Spherical outer ring, Series YAR, NBR contact seal and additional rubberized flinger on both sides, stainless steel, inch (SKF)

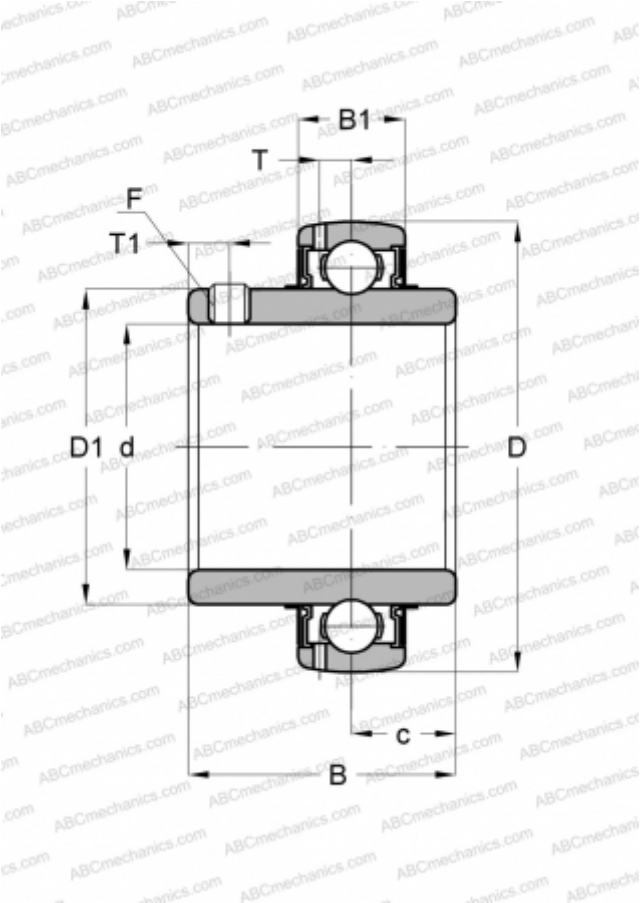

Technical specification

DIMENSIONS, MM	
d	31,750
D	72,000
D1	46,100
B	42,900
C	19,000

WEIGHT, KG	0,520
MANUFACTURER	SKF

CALCULATION DATA	
Basic dynamic load rating, C	21,600 kN
Basic static load rating, Co	15,300 kN
Fatigue load limit, Pu	0,655 kN
Limiting speed	3200 r/min