YET 211 SKF

Insert bearings

TYPE: Ball bearings, Radial insert bearings, With eccentric locking collar, Spherical outer ring, Series YET (SKF)

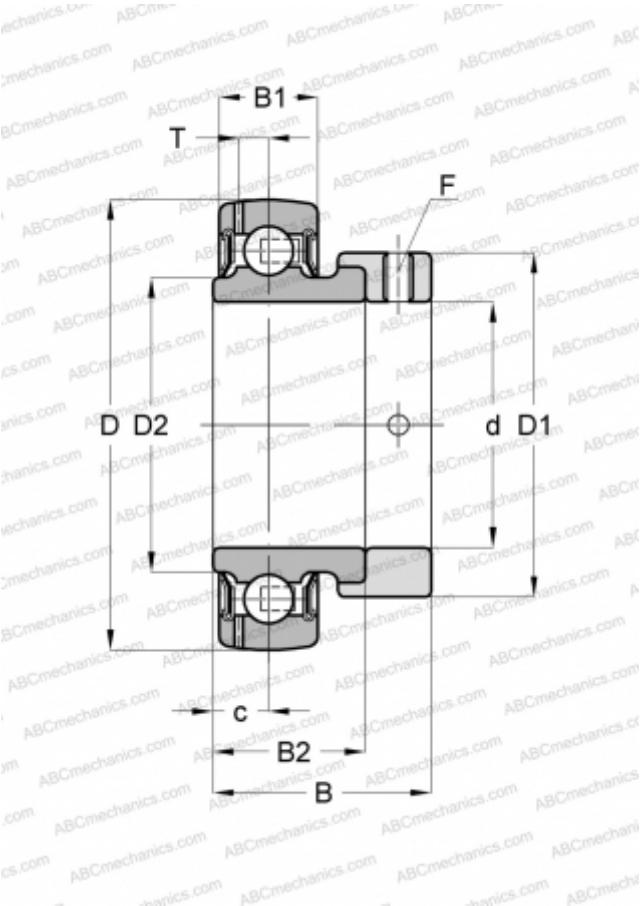

Technical specification

DIMENSIONS, MM	
d	55,000
D	100,000
D1	74,500
D2	69,000
B	48,400
B1	25,000
B2	32,600

WEIGHT, KG	0,900
MANUFACTURER	SKF

CALCULATION DATA	
Basic dynamic load rating, C	43,600 kN
Basic static load rating, Co	29,000 kN
Fatigue load limit, Pu	1,250 kN
Limiting speed	3600 r/min