YSPAG 210-115 SKF

Insert bearings

TYPE: Ball bearings, Radial insert bearings, Location by SKF ConCentra, Spherical outer ring, Series YSPAG, for agricultural applications, inch (SKF)

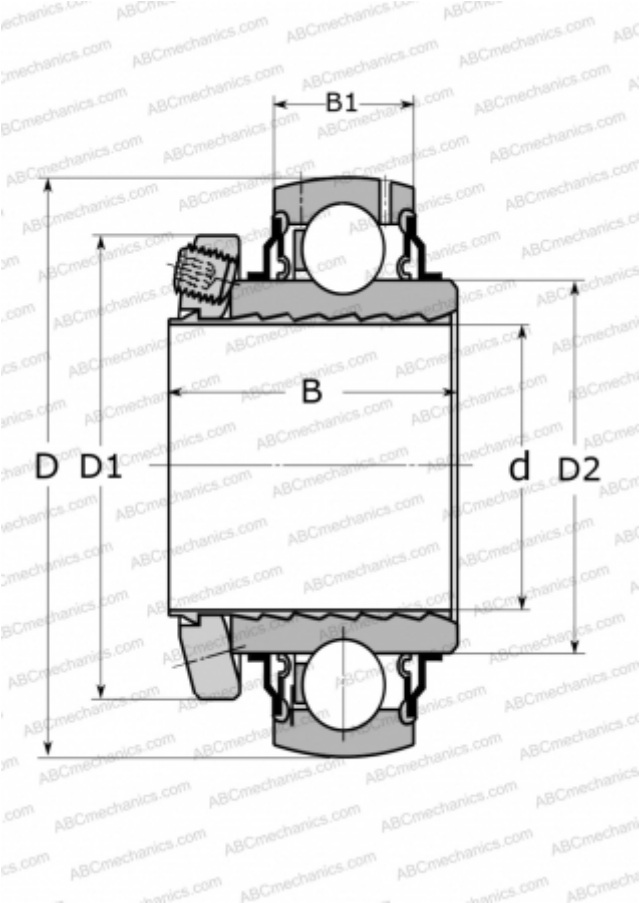

Technical specification

DIMENSIONS, MM	
d	49,213
D	90,000
D1	72,000
D2	62,500
B	46,000
B1	22,000
WEIGHT, KG	0,740
MANUFACTURER	SKF

CALCULATION DATA	
Basic dynamic load rating, C	35,100 kN
Basic static load rating, Co	23,200 kN
Fatigue load limit, Pu	0,980 kN
Reference speed	800 r/min