YSA 207-2FK SKF

Insert bearings

TYPE: Ball bearings, Radial insert bearings, With adapter sleeve, Spherical outer ring, Series YSA (SKF)

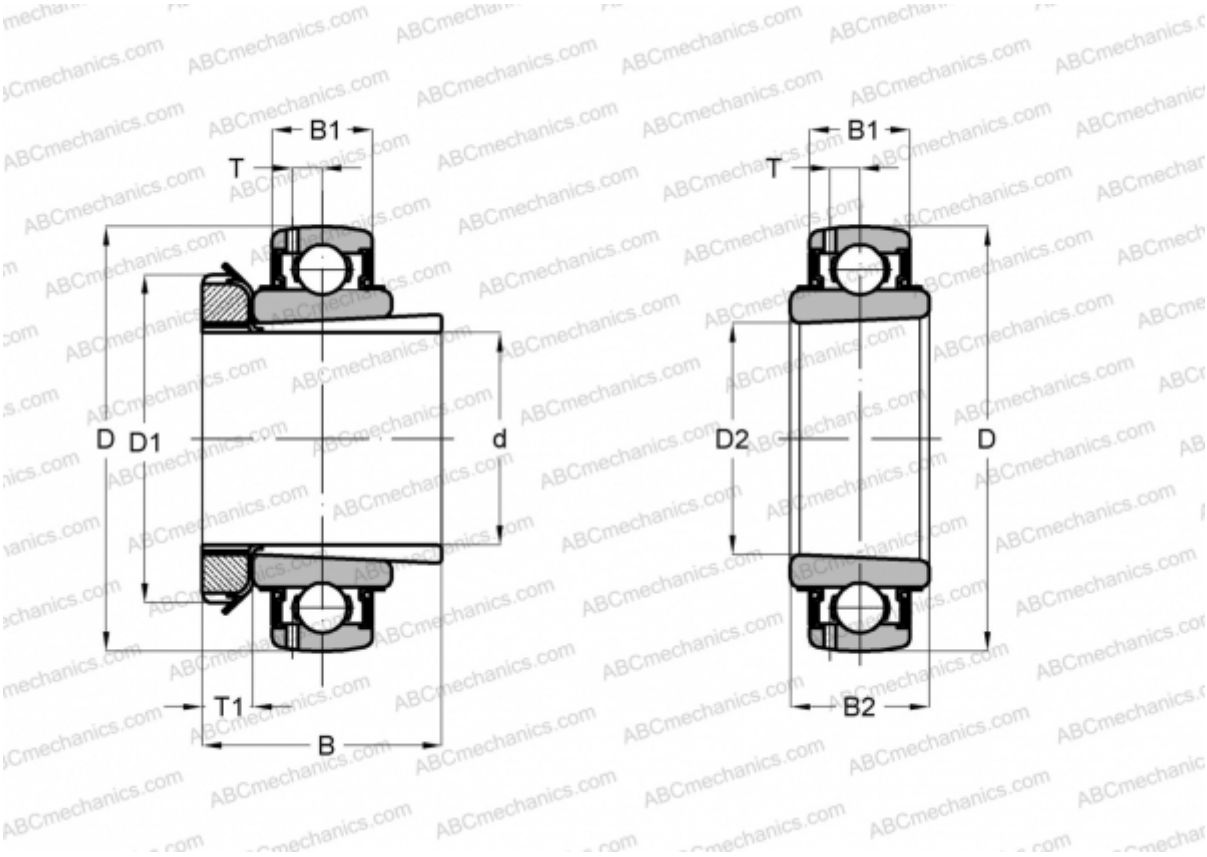

Technical specification

DIMENSIONS, MM	
d	30,000
D	72,000
D1	52,000
B	43,000
B1	19,000
B2	30,500
WEIGHT, KG	0,470
MANUFACTURER	SKF

CALCULATION DATA	
Basic dynamic load rating, C	25,500 kN
Basic static load rating, Co	15,300 kN
Fatigue load limit, Pu	0,655 kN
Limiting speed	5300 r/min

ASSOCIATED PRODUCTS
H 2307