YSA 208-2FK SKF

Insert bearings

TYPE: Ball bearings, Radial insert bearings, With adapter sleeve, Spherical outer ring, Series YSA (SKF)

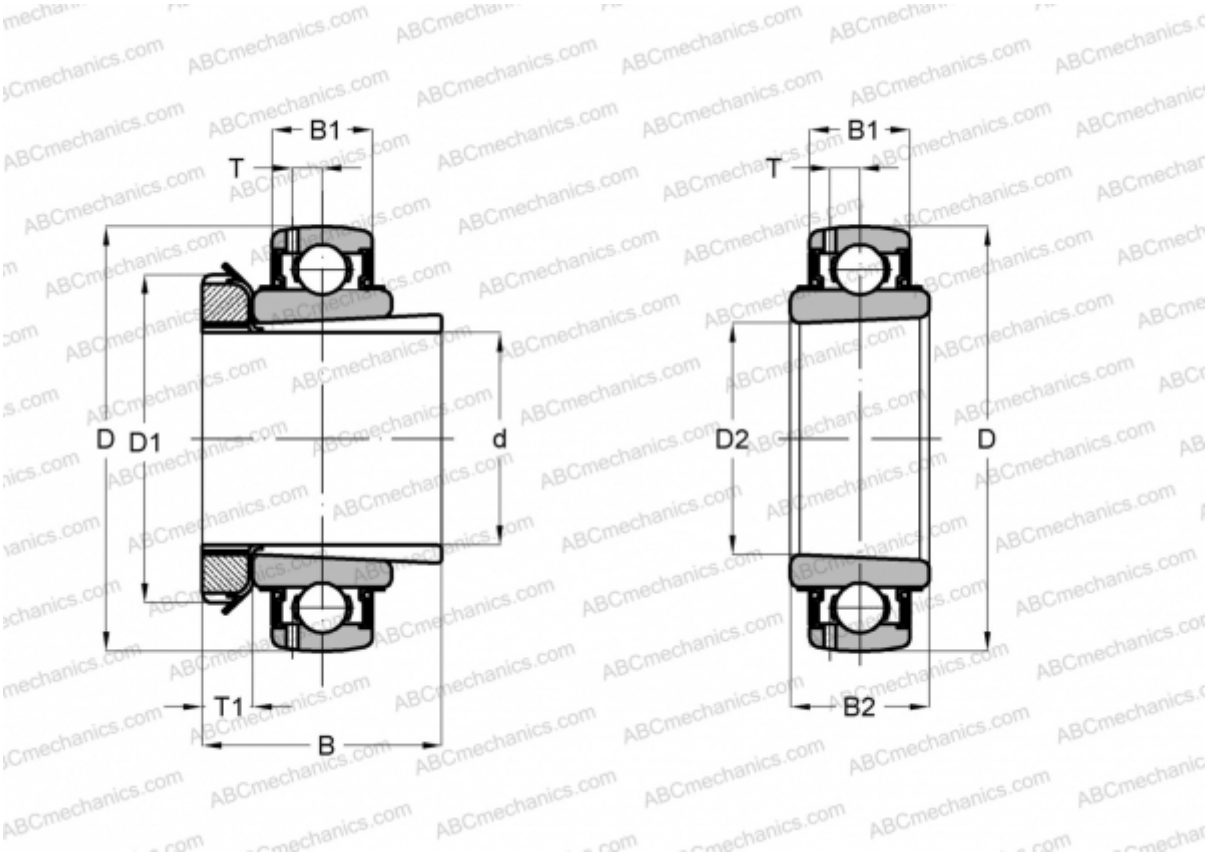

Technical specification

DIMENSIONS, MM	
d	35,000
D	80,000
D1	58,000
B	46,000
B1	21,000
B2	33,900
WEIGHT, KG	0,690
MANUFACTURER	SKF

CALCULATION DATA	
Basic dynamic load rating, C	30,700 kN
Basic static load rating, Co	19,000 kN
Fatigue load limit, Pu	0,800 kN
Limiting speed	4800 r/min

ASSOCIATED PRODUCTS
H 2308