YSA 210-2FK SKF

Insert bearings

TYPE: Ball bearings, Radial insert bearings, With adapter sleeve, Spherical outer ring, Series YSA (SKF)

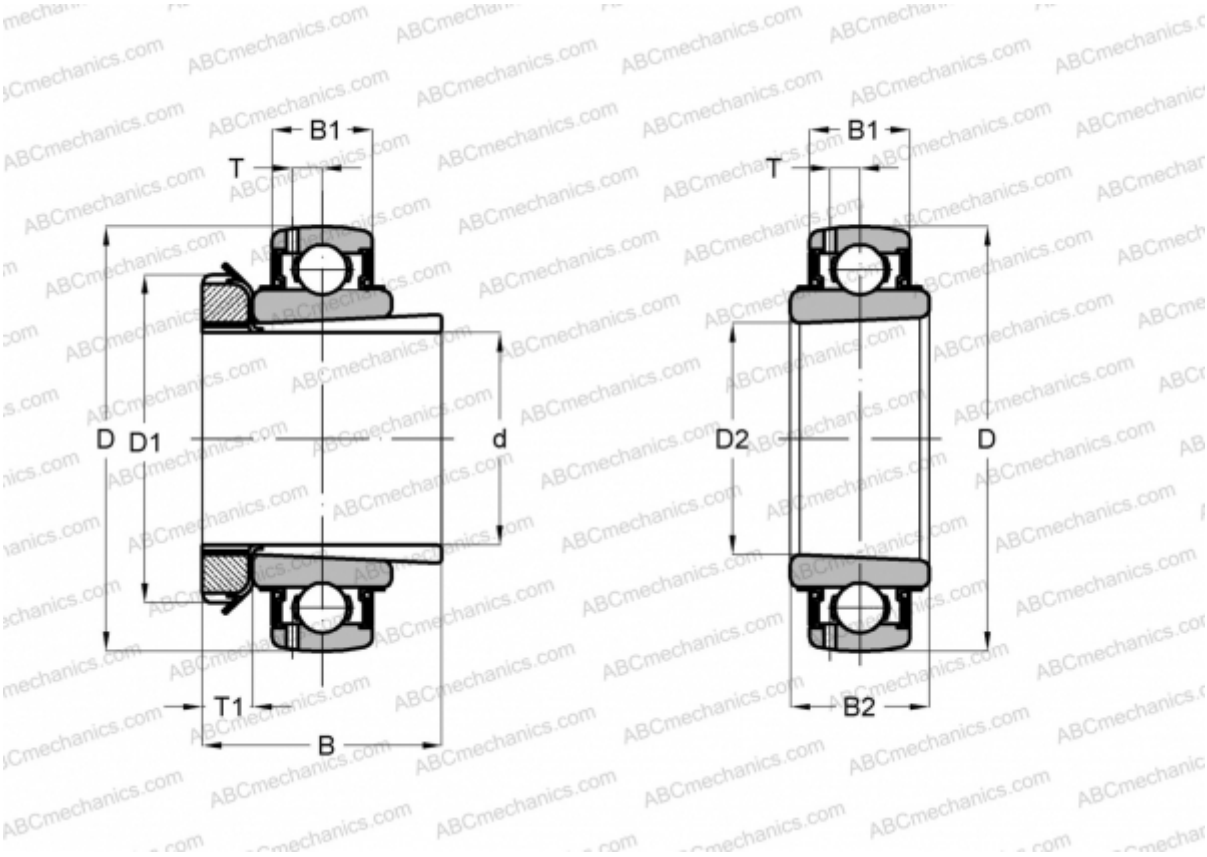

Technical specification

DIMENSIONS, MM	
d	45,000
D	90,000
D1	70,000
B	55,000
B1	22,000
B2	37,000
WEIGHT, KG	0,880
MANUFACTURER	SKF

CALCULATION DATA	
Basic dynamic load rating, C	35,100 kN
Basic static load rating, Co	23,200 kN
Fatigue load limit, Pu	0,980 kN
Limiting speed	4000 r/min

ASSOCIATED PRODUCTS
H 2310