NA 4901 2RS ABC

Needle roller bearings

TYPE: Roller bearings, Needle, Single row, With machined rings with flanges, with an inner ring, Lip seals on both side, metric

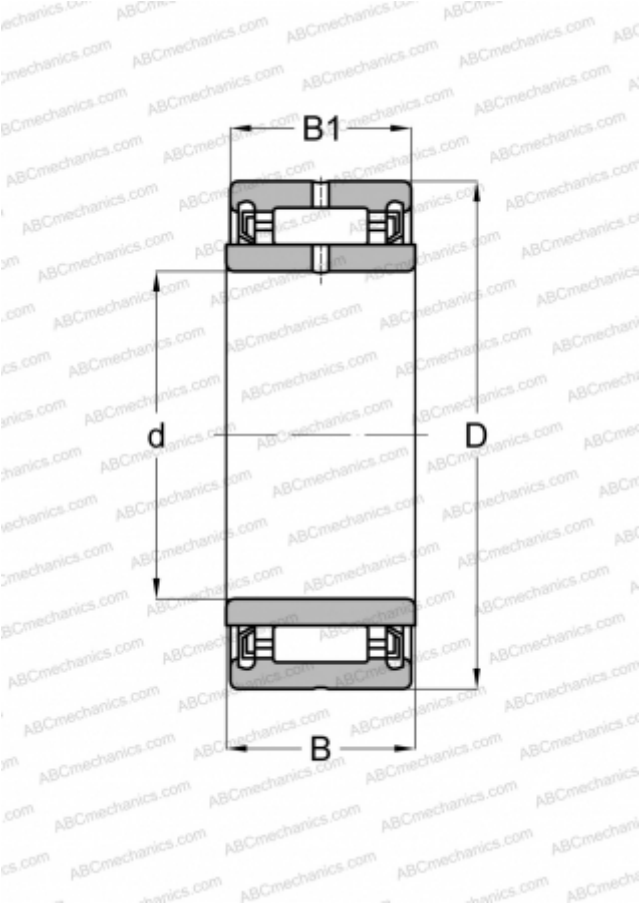

Technical specification

DIMENSIONS, MM	
d	12,000
D	24,000
B	14,000
B1	13,000
WEIGHT, KG	0,032
MANUFACTURER	ABC

INTERCHANGE	
FAG	NA 4901 2RSR
INA	NA 4901 2RSR
SKF	NA 4901.2RS
TORRINGTON	NA 4901 2RS
IKO	NA 4901 UU