RNAO 5x10x8 ABC

Needle roller bearings

TYPE: Roller bearings, Needle, Single row, With machined rings without flanges, without an inner ring, Metric

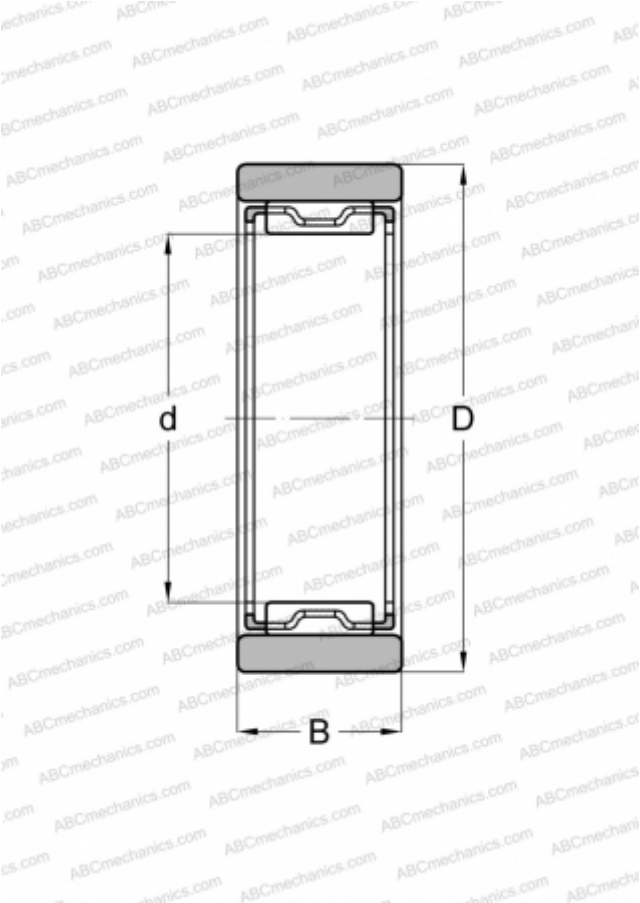

Technical specification

DIMENSIONS, MM	
d	5,000
D	10,000
B	8,000
WEIGHT, KG	0,005
MANUFACTURER	ABC
INTERCHANGE	
FAG	RNAO 5x10x8(RNAF 5x10x8)
INA	RNAO 5x10x8
SKF	RNAO 5x10x8 TN
IKO	RNAF 5108 N