MCF-85-S McGill

Cam followers

TYPE: Roller bearings, Stud type track rollers, With axial guidance, full complement bearing, sealing rings on both sides

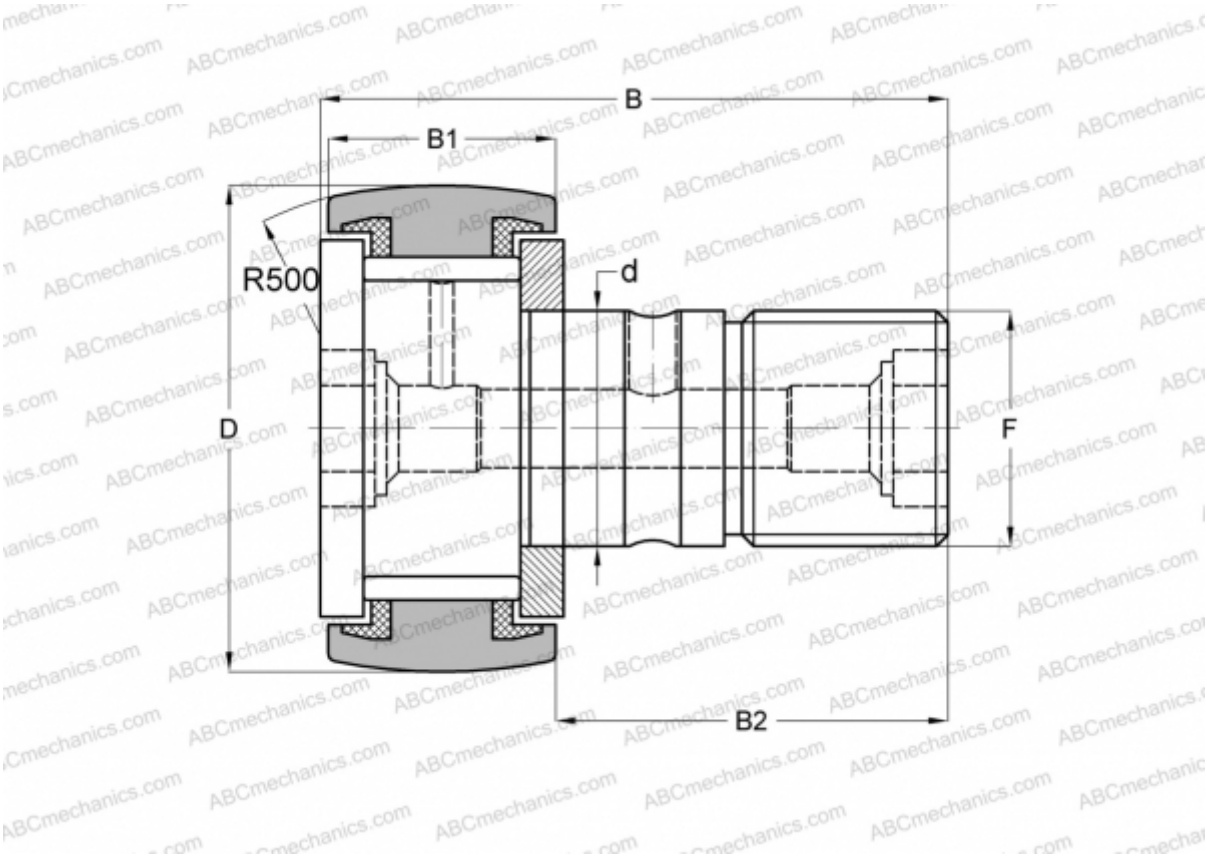

Technical specification

DIMENSIONS, MM	
d	30,000
D	85,000
B	100,000
B1	35,000
B2	63,000
F	M30x1.5
WEIGHT, KG	2,030
MANUFACTURER	McGill
INTERCHANGE	
ABC	CF 30-1 VUUR
IKO	CF 30-1 VUUR