# KRE 80 ABC

Cam followers

TYPE: Roller bearings, Stud type track rollers, With axial guidance, with eccentric collar

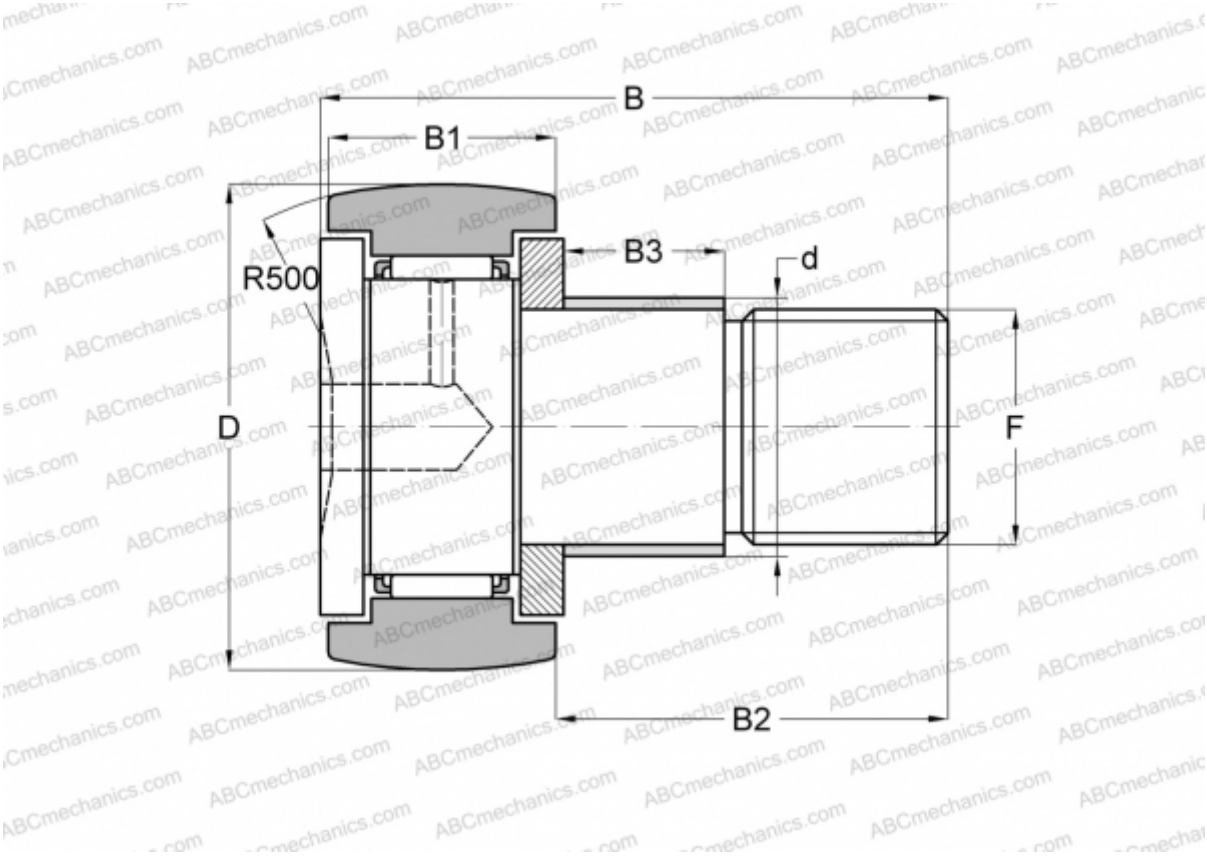


## Technical specification

| DIMENSIONS, MM | |
|---|---|
| d | 35,000 |
| D | 80,000 |
| B | 100,000 |
| B1 | 35,000 |
| B2 | 63,000 |
| B3 | 29,000 |
| F | M30x1.5 |
| **WEIGHT, KG** | 1,665 |
| **MANUFACTURER** | ABC |

| INTERCHANGE | |
|---|---|
| INA | KRE 80 |