KRE 80 PPA SKF

Cam followers

TYPE: Roller bearings, Stud type track rollers, With axial guidance, with eccentric collar, sealing rings on both sides

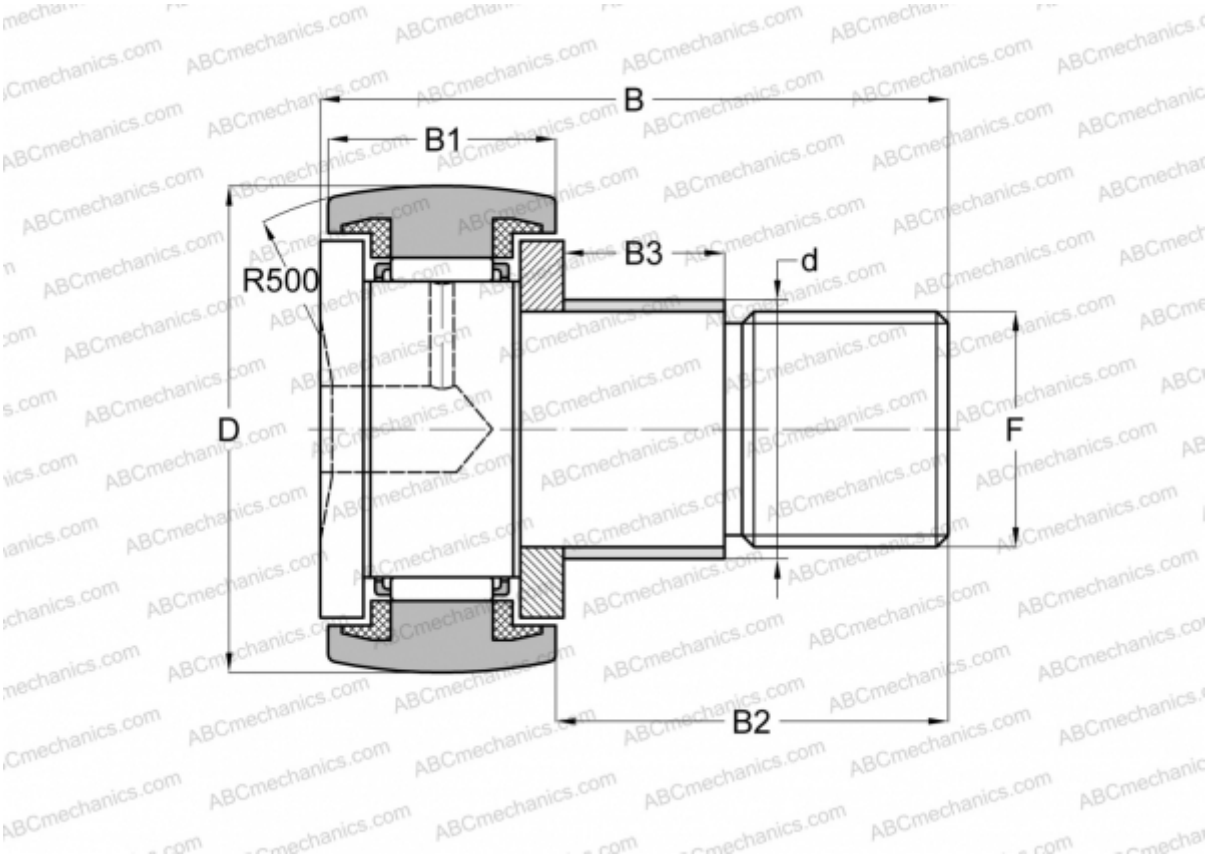

Technical specification

DIMENSIONS, MM	
d	35,000
D	80,000
B	100,000
B1	35,000
B2	63,000
F	M 30x1.5

WEIGHT, KG	1,665
MANUFACTURER	SKF

INTERCHANGE	
ABC	KRE 80 PP
INA	KRE 80 PPA

CALCULATION DATA	
Basic dynamic load rating, C	36,900 kN

CALCULATION DATA	
Basic static load rating, Co	72,000 kN
Fatigue load limit, Pu	9,000 kN
Limiting speed	1800 r/min

REPLACES
KRE 80 PP