NUKR 35 C(NUKD 35AA) FAG

Cam followers

TYPE: Roller bearings, Stud type track rollers, With axial guidance, full complement cylindrical roller set, labyrinth seals on both sides

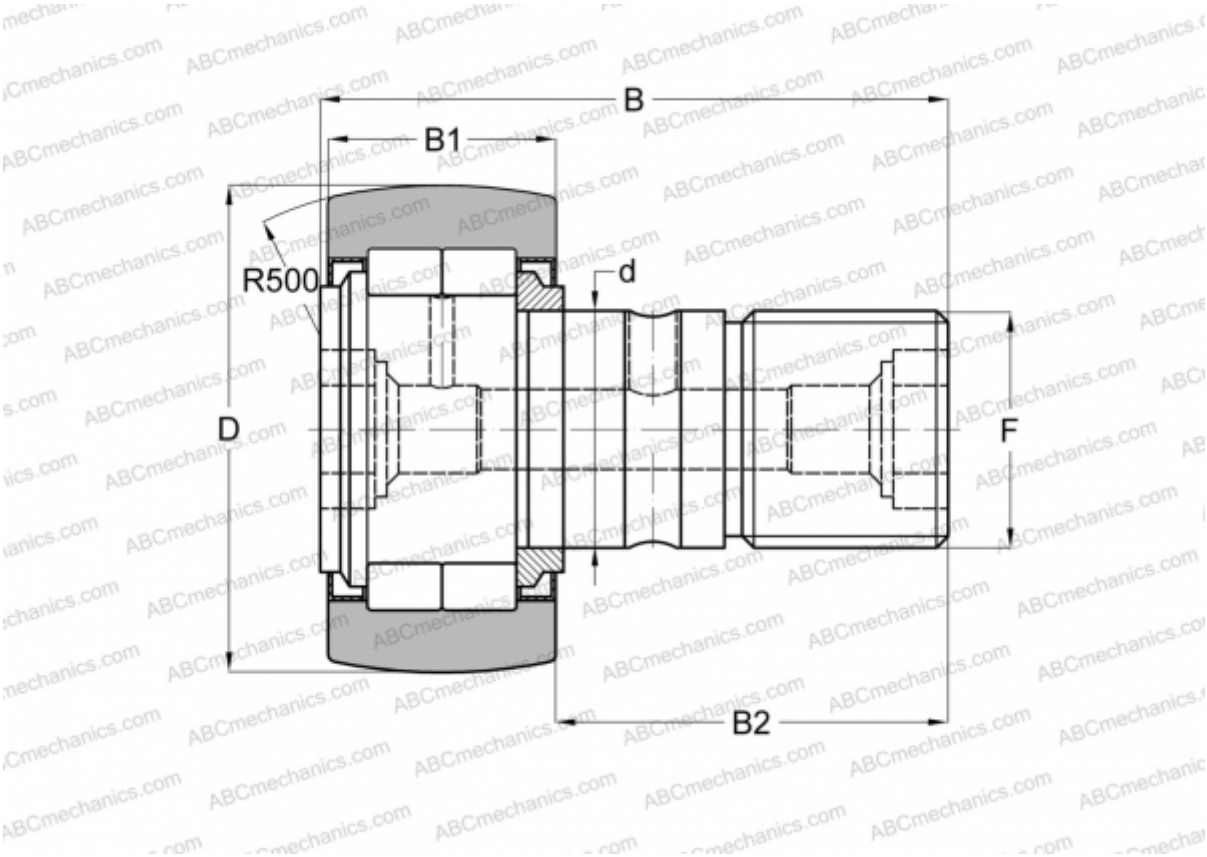

Technical specification

DIMENSIONS, MM	
d	16,000
D	35,000
B	52,000
B1	18,000
B2	32,500
F	M16x1.5
WEIGHT, KG	0,172
MANUFACTURER	FAG

INTERCHANGE	
ABC	NUKR 35
INA	NUKR 35
IKO	NUCF 16 R
McGill	MCFD 35 S

INTERCHANGE	
SKF	NUKR 35 A