NUCF 16 R IKO

Cam followers

TYPE: Roller bearings, Stud type track rollers, With axial guidance, full complement cylindrical roller set, labyrinth seals on both sides

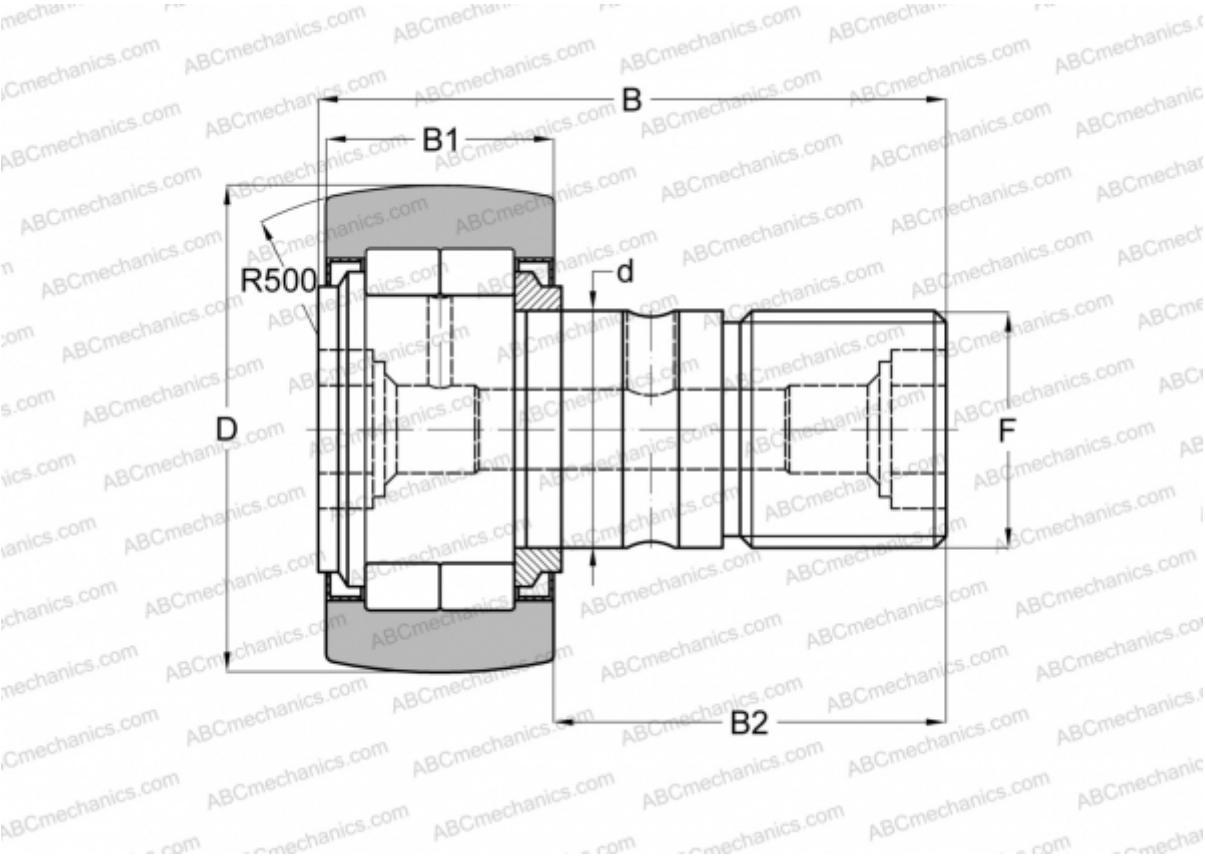

Technical specification

DIMENSIONS, MM	
d	16,000
D	35,000
B	52,100
B1	18,000
B2	32,500
F	M16x1.5
WEIGHT, KG	0,167
MANUFACTURER	IKO

INTERCHANGE	
ABC	NUKR 35
FAG	NUKR 35 C(NUKD 35AA)
INA	NUKR 35
McGill	MCFD 35 S

INTERCHANGE	
SKF	NUKR 35 A

CALCULATION DATA	
Basic dynamic load rating, C	23,400 kN
Basic static load rating, Co	27,300 kN