RSTO 5 X ABC

Yoke type track roller

TYPE: Roller bearings, Yoke type track rollers, Without axial guidance, Without an inner ring, Outer ring without ribs, cylindrical outer ring

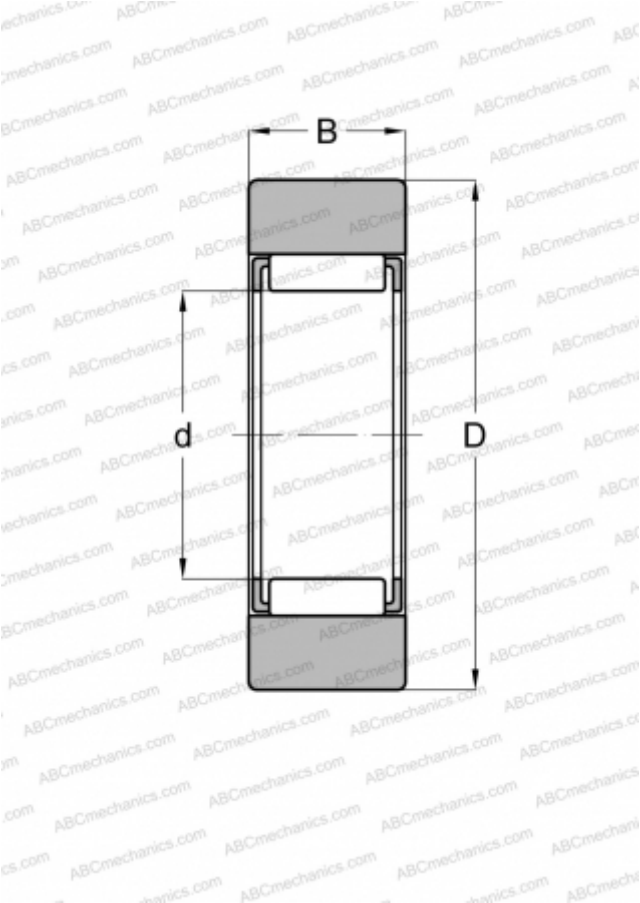

Technical specification

DIMENSIONS, MM	
d	7,000
D	16,000
B	7,800
WEIGHT, KG	0,014
MANUFACTURER	ABC
INTERCHANGE	
FAG	RSTO5 DZ(RNAST 5)
INA	RSTO 5 X
SKF	RSTO 5 X TN
TORRINGTON	RSTO 5 DZ
IKO	RNAST 5