RSTO 6 X ABC

Yoke type track roller

TYPE: Roller bearings, Yoke type track rollers, Without axial guidance, Without an inner ring, Outer ring without ribs, cylindrical outer ring

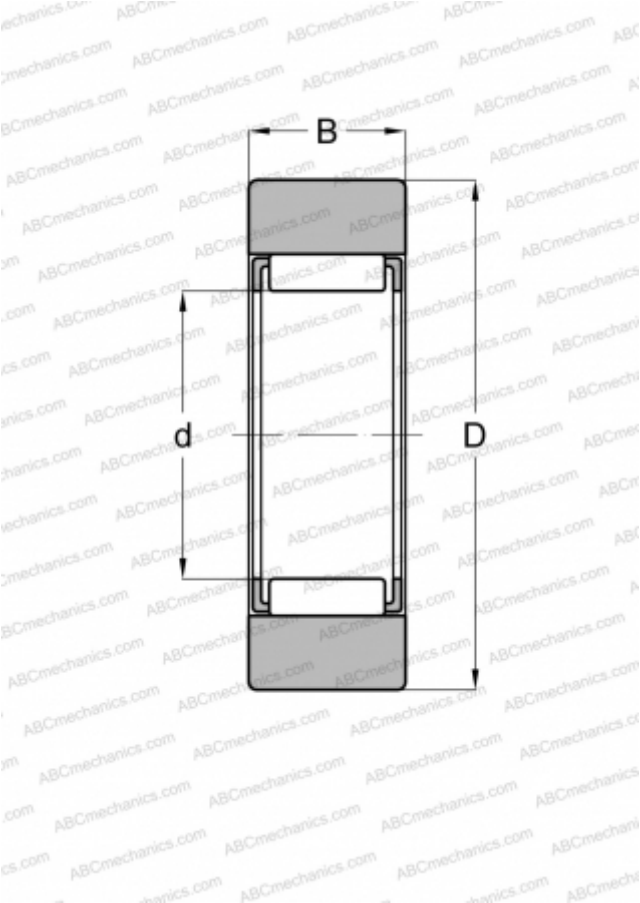

Technical specification

DIMENSIONS, MM	
d	10,000
D	19,000
B	9,800
WEIGHT, KG	0,014
MANUFACTURER	ABC
INTERCHANGE	
FAG	RSTO6 DZ(RNAST 6)
INA	RSTO 6 X
SKF	RSTO 6 X TN
TORRINGTON	RSTO 6 DZ
IKO	RNAST 6