NATV 10 PPA SKF

Yoke type track roller

TYPE: Roller bearings, Yoke type track rollers, With axial guidance, Full complement needle roller set, sealing rings on both sides

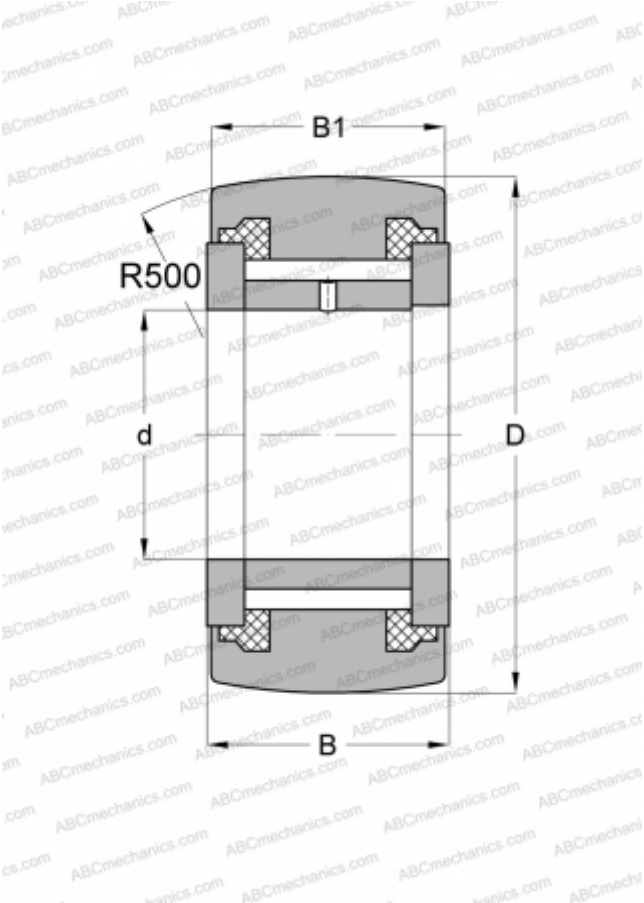

Technical specification

DIMENSIONS, MM	
d	10,000
D	30,000
B	15,000
B1	14,000
WEIGHT, KG	0,064
MANUFACTURER	SKF

INTERCHANGE	
ABC	NATV 10 PP
INA	NATV 10 PP
IKO	NART 10 VUUR
McGill	MCYR-10-S

CALCULATION DATA	
Basic dynamic load rating, C	8,970 kN
Basic static load rating, Co	14,600 kN
Fatigue load limit, Pu	1,660 kN
Limiting speed	3200 r/min