SM 16 HIRSCHMANN

Rod ends

TYPE: Plain bearings, Spherical plain bearings and rod ends, Rod ends, Requiring maintenance, With internal thread, open design, right hand thread, series GAKR..PB, SAKAC, POS

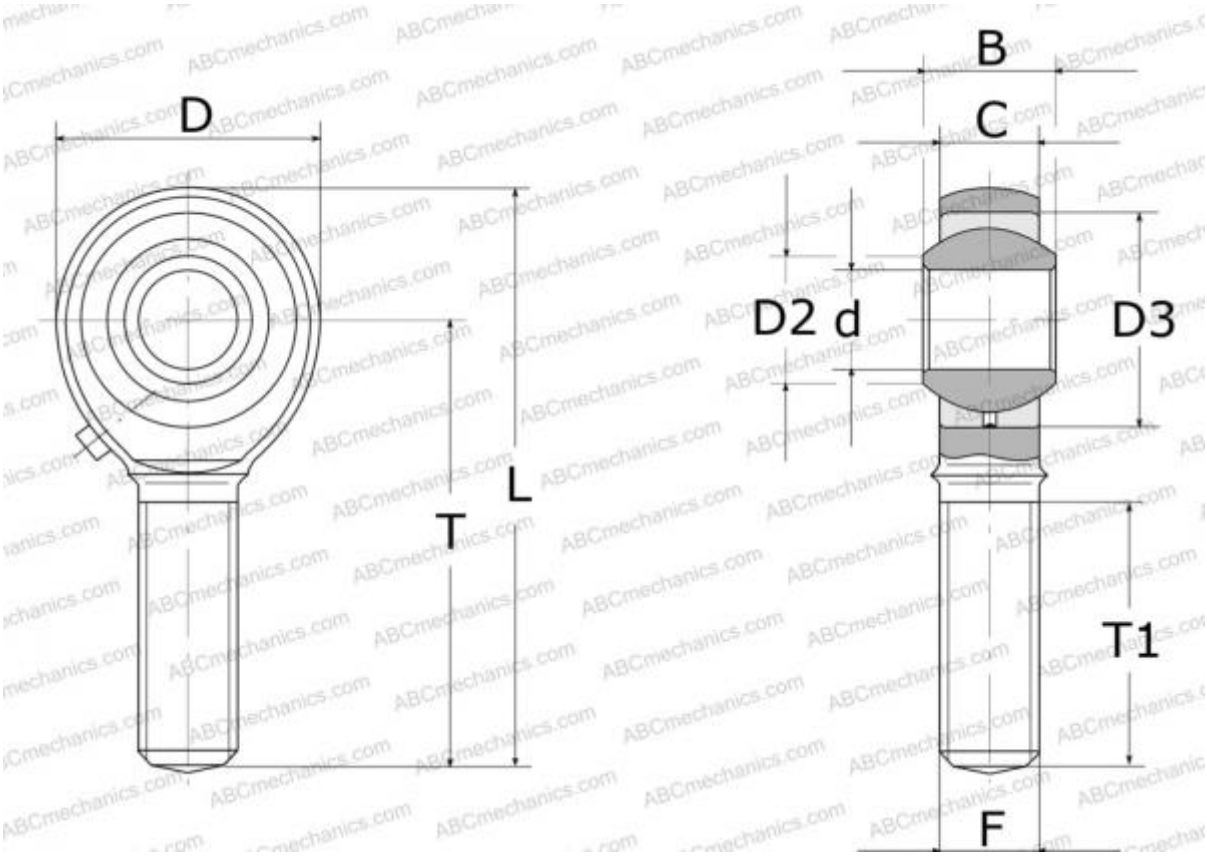

Technical specification

DIMENSIONS, MM	
d	16,000
D	38,000
D2	19,400
B	21,000
L	85,000
T	66,000
T1	40,000
C	15,000
F	M16x2

WEIGHT, KG	0,185
MANUFACTURER	HIRSCHMANN

INTERCHANGE	
ABC	POS 16

INTERCHANGE	
IKO	POS 16
INA	GAKR 16 PB
SKF	SAKAC 16 M
HEIM	SMG 16
AURORA	MM-M16Z