POSB 2 L IKO

Rod ends

TYPE: Plain bearings, Spherical plain bearings and rod ends, Rod ends, Requiring maintenance, With internal thread, open design, left hand thread, inch, series POSB..L

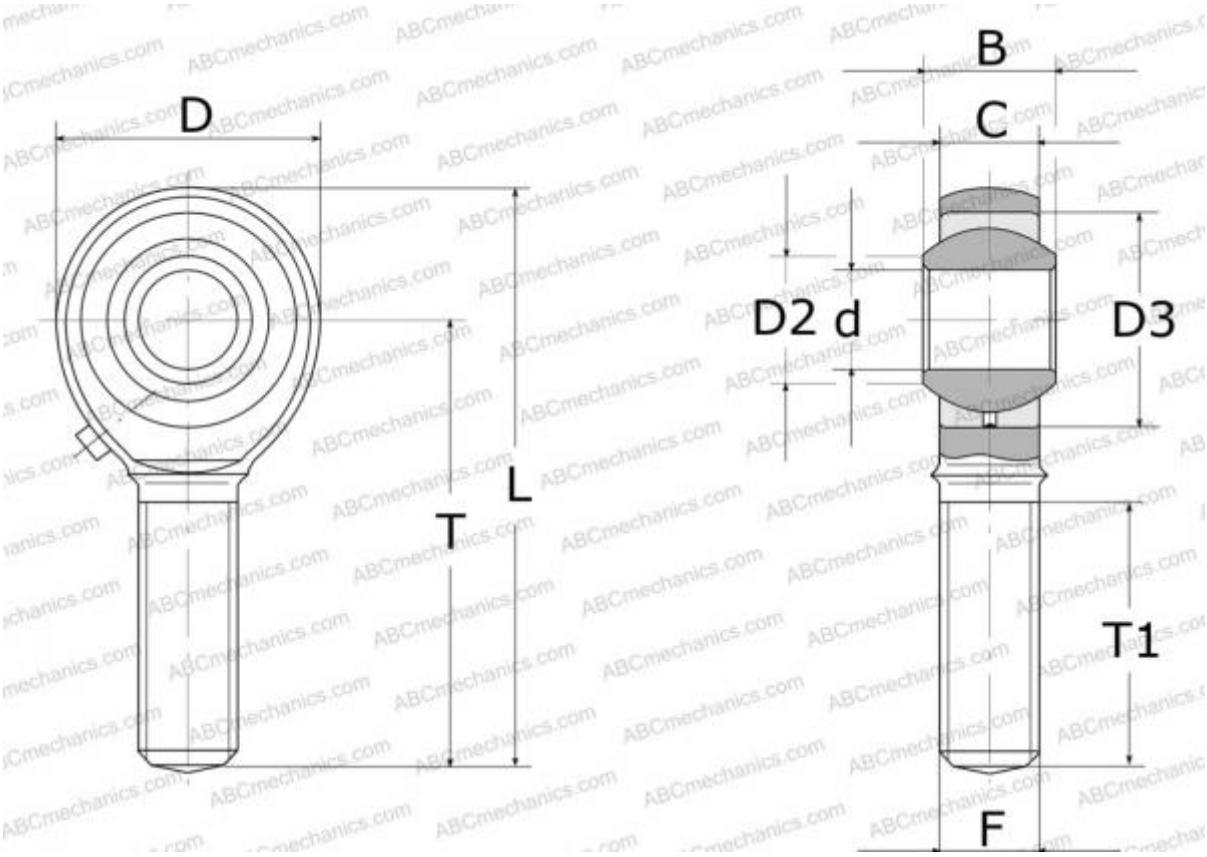

Technical specification

DIMENSIONS, MM	
d	3,175
D	11,910
D2	4,750
B	6,350
L	29,770
T	23,800
T1	12,700
C	4,750
F	.1380-32UNC

WEIGHT, KG	0,006
MANUFACTURER	IKO

INTERCHANGE	
ABC	POSB 2 L

CALCULATION DATA	
Basic dynamic load rating, C	1,850 kN
Basic static load rating, Co	2,160 kN