SA 12 C SKF

Rod ends

TYPE: Plain bearings, Spherical plain bearings and rod ends, Rod ends, Maintenance free, With external thread, open design, right hand thread, series SA..C (SKF)

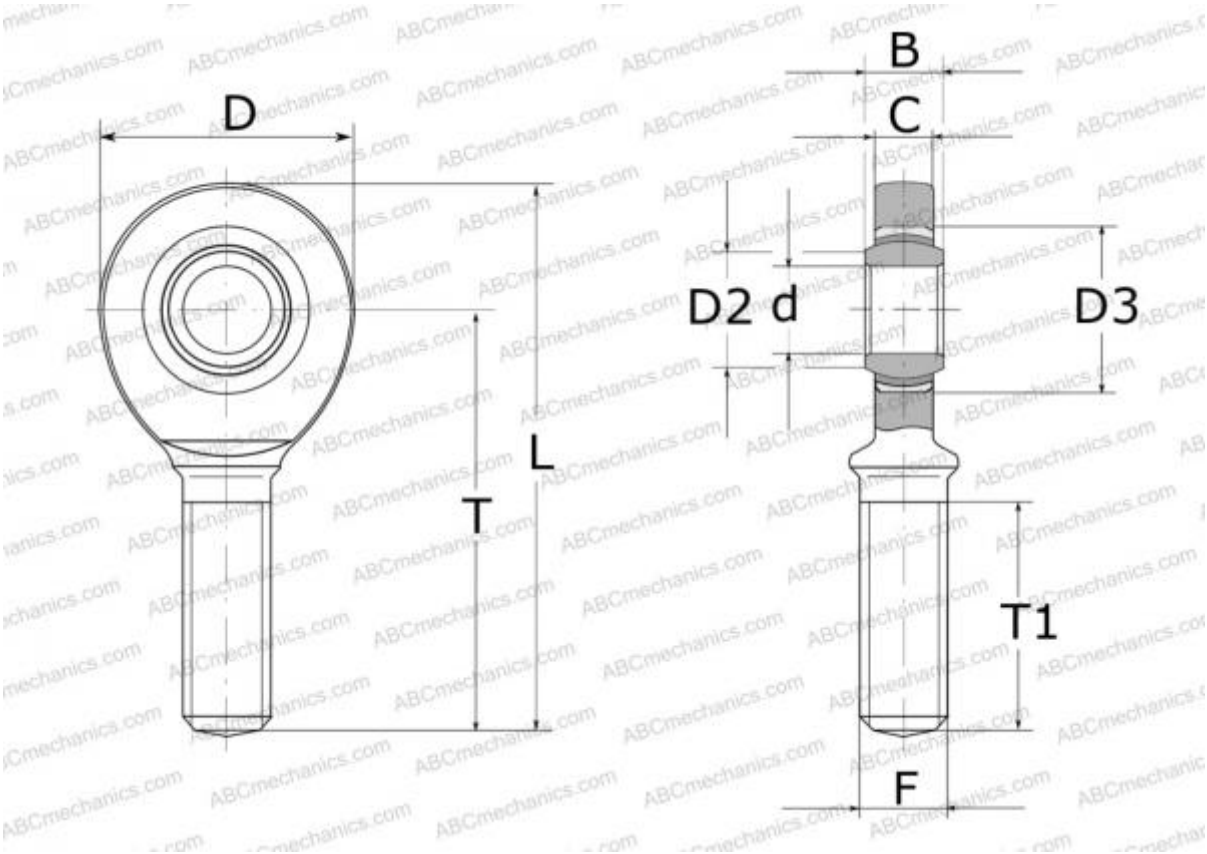

Technical specification

DIMENSIONS, MM	
d	12,000
D	35,000
B	10,000
L	73,000
T	54,000
T1	28,000
C	8,500
F	M12
WEIGHT, KG	0,078
MANUFACTURER	SKF

CALCULATION DATA	
Basic dynamic load rating, C	11,400 kN
Basic static load rating, Co	24,500 kN