SI 50 TXE-2LS SKF

Rod ends

TYPE: Plain bearings, Spherical plain bearings and rod ends, Rod ends, Maintenance free, With internal thread, open design, right hand thread, series SI(A)..TXE-2LS (SKF)

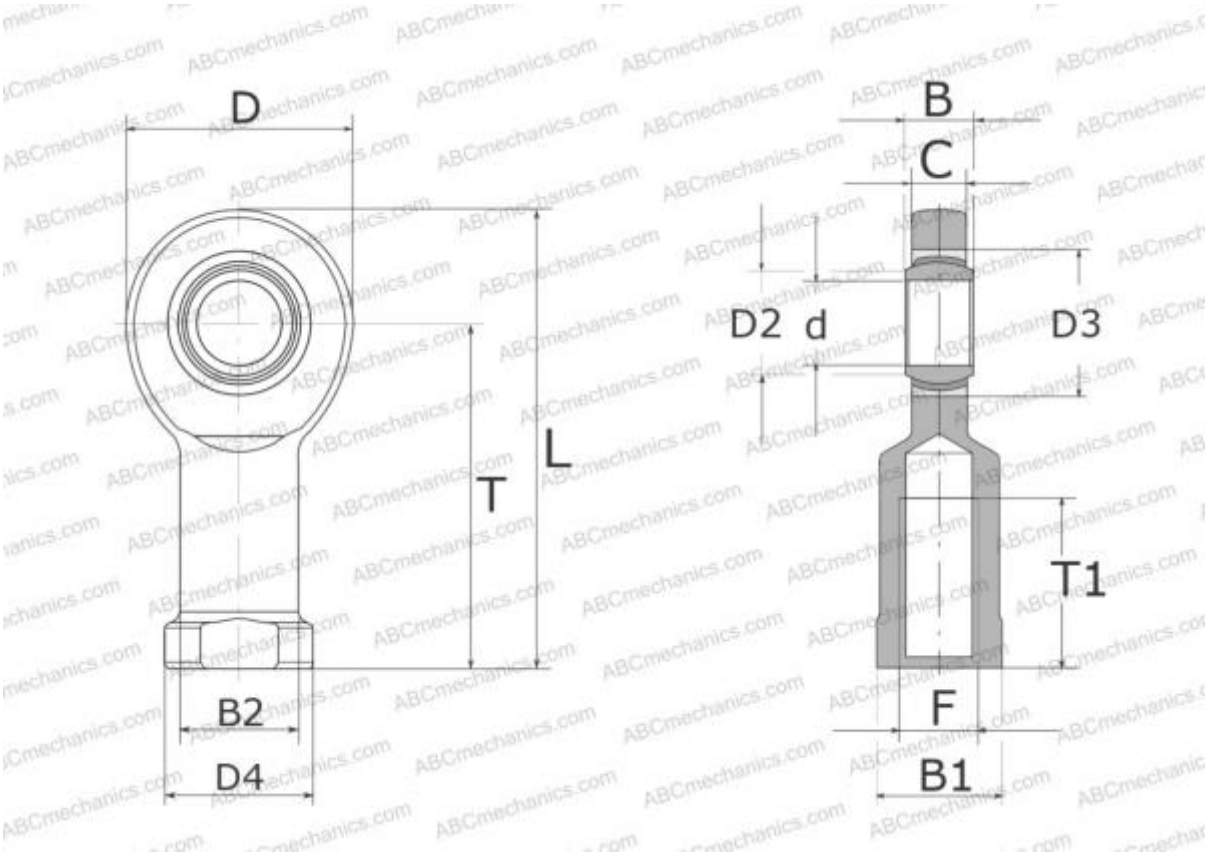

Technical specification

DIMENSIONS, MM	
d	50,000
D	114,000
D4	70,000
B	35,000
B1	60,000
L	254,000
T	195,000
T1	68,000
C	31,000
F	M52x3
WEIGHT, KG	4,500
MANUFACTURER	SKF

CALCULATION DATA	
Basic dynamic load rating, C	440,000 kN
Basic static load rating, Co	270,000 kN