SA 45 ES-2RS SKF

Rod ends

TYPE: Plain bearings, Spherical plain bearings and rod ends, Rod ends, Requiring maintenance, With external thread, open design, right hand thread, series SA(A)..ES-2RS (SKF)

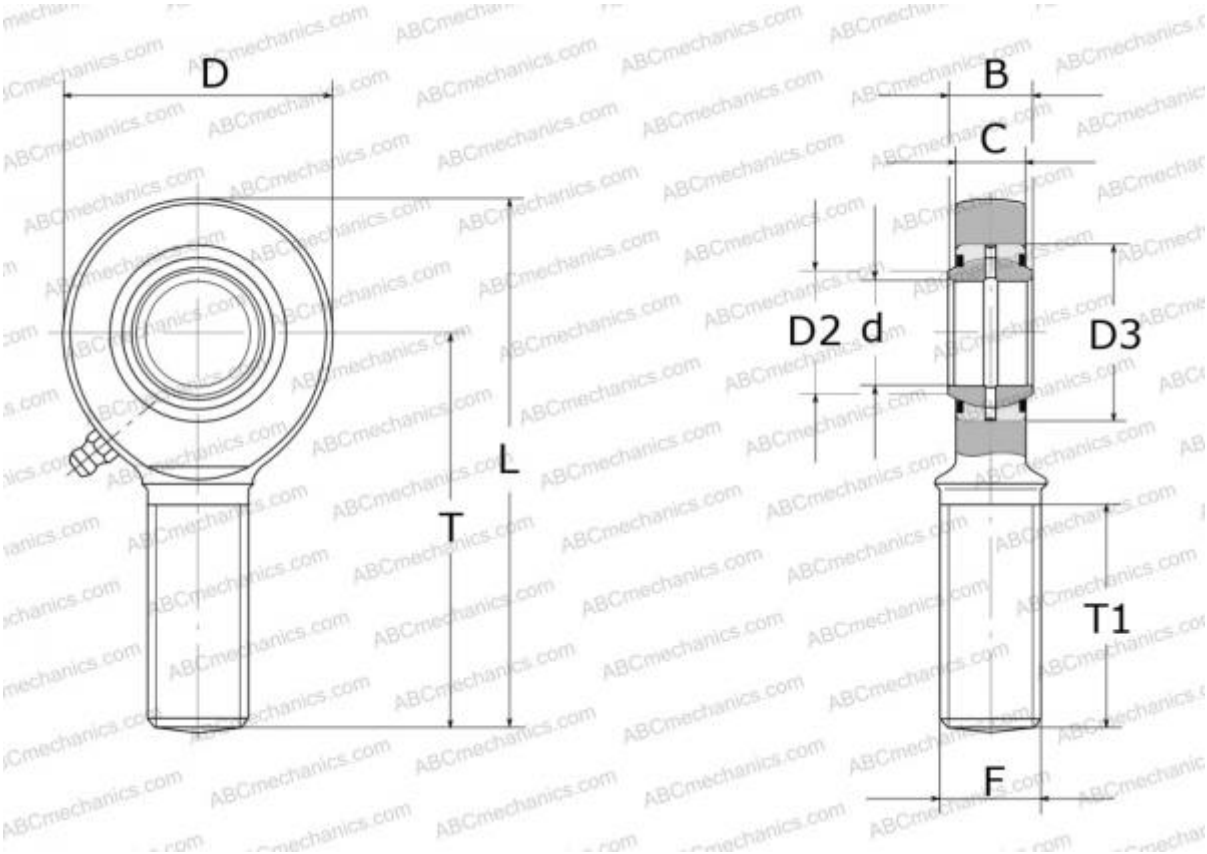

Technical specification

DIMENSIONS, MM	
d	45,000
D	104,000
B	32,000
L	219,000
T	165,000
T1	95,000
C	28,000
F	M45x3

MANUFACTURER	SKF

CALCULATION DATA	
Basic dynamic load rating, C	127,000 kN
Basic static load rating, Co	200,000 kN