GIR 40 DO 2RS INA

TYPE: Plain bearings, Spherical plain bearings and rod ends, Rod ends, Requiring maintenance, With internal thread, with lip seals or high performance seals, right hand thread, series GIR..-DO-2RS (INA)

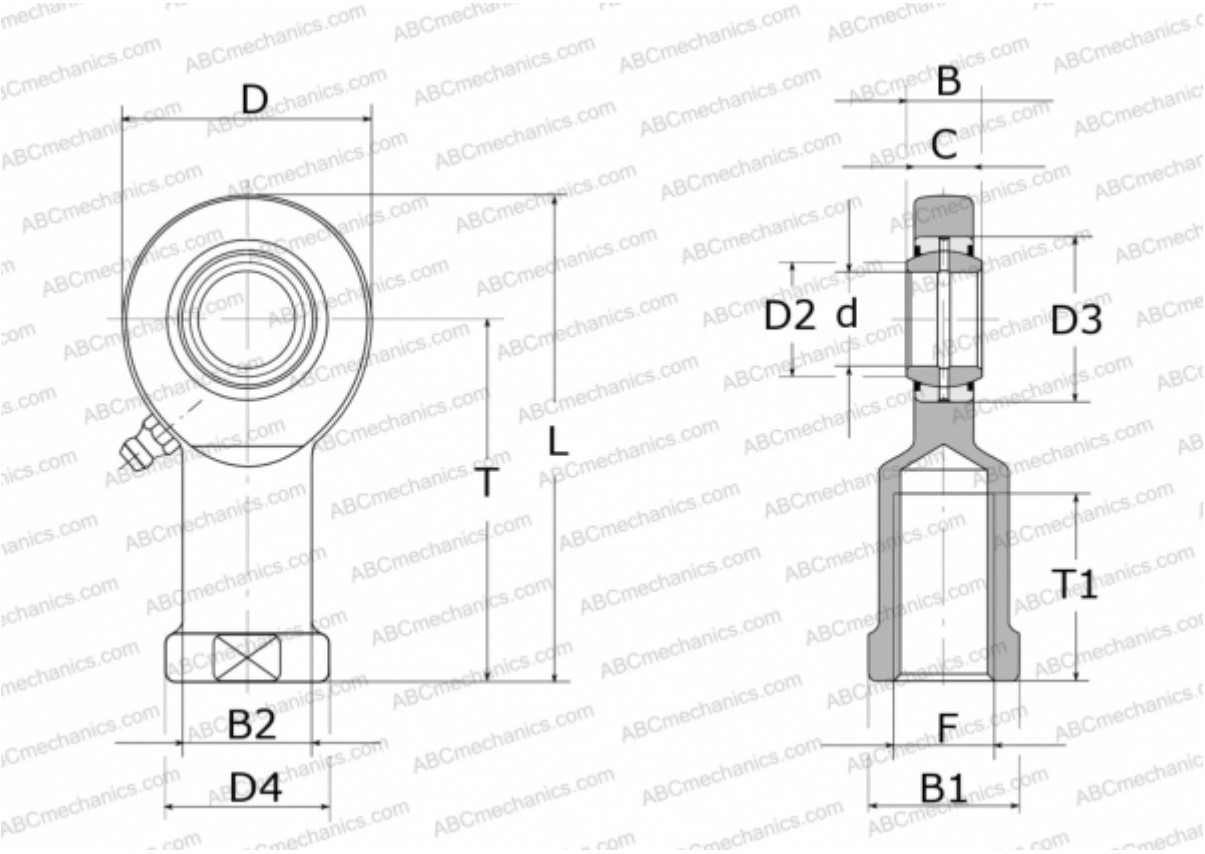

Technical specification

DIMENSIONS, MM	
d	40,000
D	92,000
D2	45,000
D3	62,000
D4	65,000
B	28,000
B1	55,000
B2	52,000
L	188,000
T	142,000
T1	65,000
C	23,000
F	M39X3

MANUFACTURER	INA