E2.3308 A-2Z SKF

Angular contact ball bearings

TYPE: Ball bearings, Angular contact ball bearing, Double row, Contact angle 30°, Gap seals on both side, energy Efficient bearing

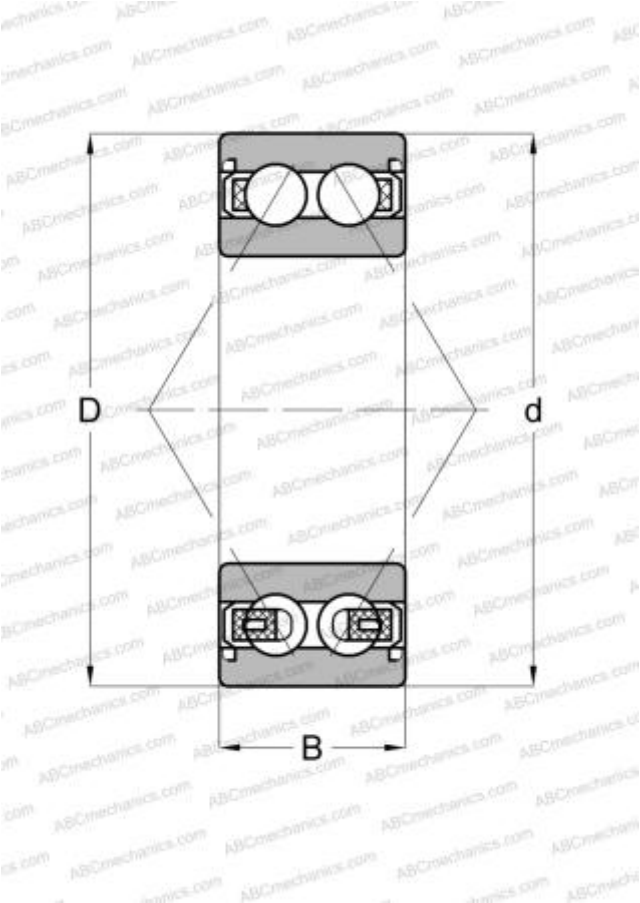

Technical specification

DIMENSIONS, MM	
d	40,000
D	90,000
B	36,500

MANUFACTURER	SKF

CALCULATION DATA	
Basic dynamic load rating, C	64,000 kN
Basic static load rating, Co	44,000 kN
Fatigue load limit, Pu	1,860 kN
Limiting speed	7500 r/min