B7015CTP4S UM FAG

Angular contact ball bearings

TYPE: Ball bearings, Angular contact ball bearing, Precision (spindle), Contact angle 15°, Standard, for mounting in pairs or sets, medium preload

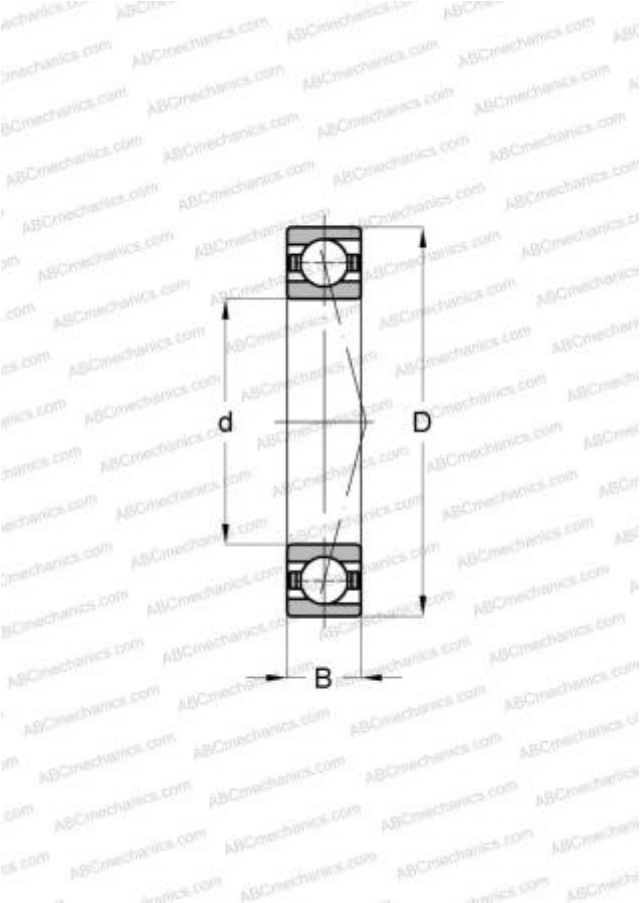

Technical specification

DIMENSIONS, MM	
d	75,000
D	115,000
B	20,000

MANUFACTURER	FAG

INTERCHANGE	
ABC	7015 CDGB/P4A
BARDEN	115HC UM
SKF	7015 CDGB/P4A
NSK	7015 CTRSUMP3
SNFA	EX75 7CE1 UM

CALCULATION DATA	
Basic dynamic load rating, C	51,000 kN
Basic static load rating, Co	46,500 kN
Fatigue load limit, Pu	3,350 kN
Attainable speed for grease lubrication	12000 r/min
Attainable speed for oil-air lubrication	19000 r/min