S7200 ACDGA/P4A ABC

Angular contact ball bearings

TYPE: Ball bearings, Angular contact ball bearing, Precision (spindle), Contact angle 25°, Standard version, mounting by pairs or sets, non-contact seals on both sides, light preload

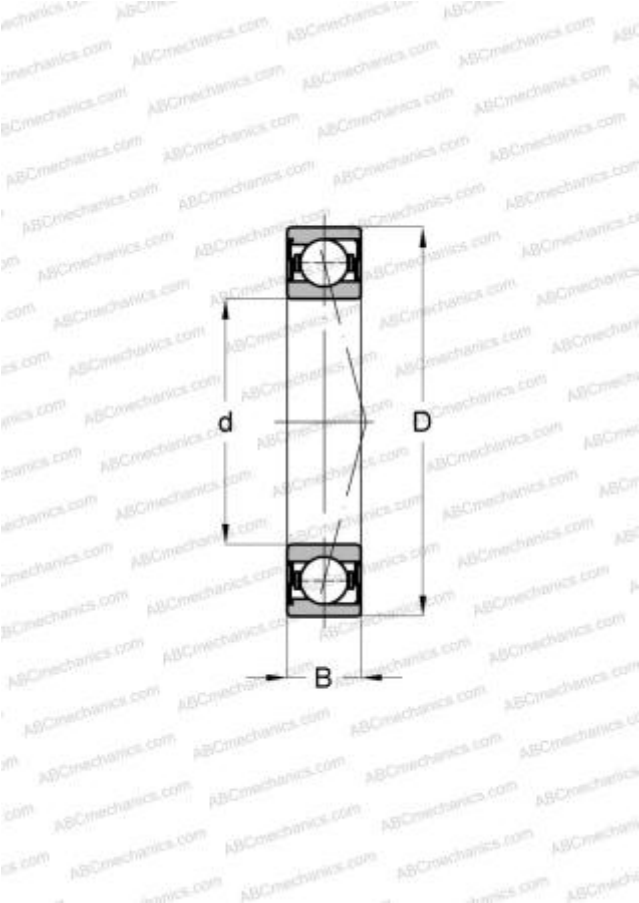

Technical specification

DIMENSIONS, MM	
d	10,000
D	30,000
B	9,000

MANUFACTURER	ABC

INTERCHANGE	
FAG	B7200E 2RSD T P4S UL
SKF	S7200 ACDGA/P4A