ZKLR0828-2Z INA

Axial angular contact ball bearing

TYPE: Ball bearings, Axial angular contact ball bearing, Unit, Series ZKLR, double direction, with flange, gap seals on both side

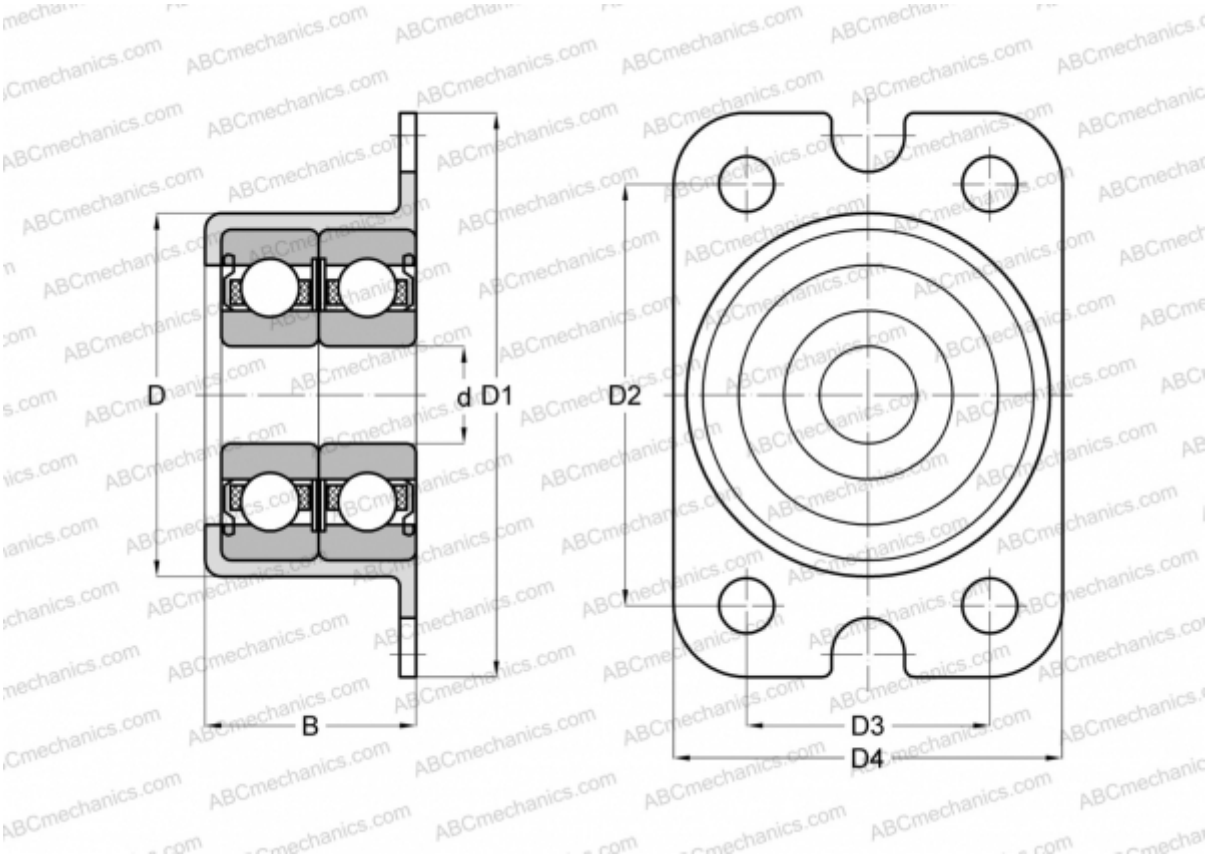

Technical specification

DIMENSIONS, MM	
d	8,000
D	23,900
D1	35,000
D2	26,000
D3	20,000
D4	28,000
B	15,500

MANUFACTURER	INA

CALCULATION DATA	
Basic dynamic load rating, C	4,900 kN
Basic static load rating, Co	2,280 kN
Limiting speed	6200 r/min

ASSOCIATED PRODUCTS
ZM08