UC 203 ABC

Insert bearings

TYPE: Ball bearings, Radial insert bearings, Grub screw to inner ring, Spherical outer ring, Seals on both side, R seal, relubrication

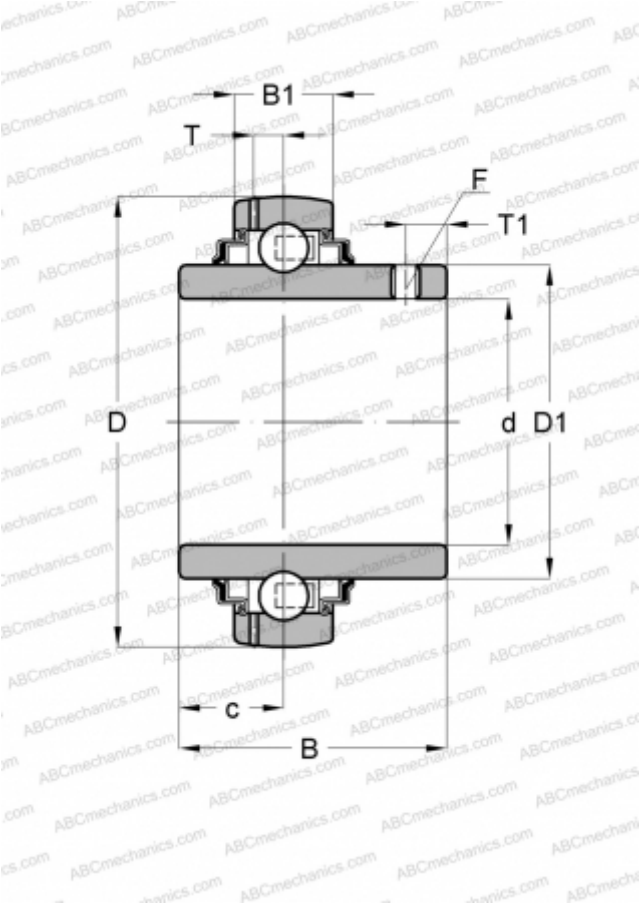

Technical specification

DIMENSIONS, MM	
d	17,000
D	47,000
D1	29,000
B	31,000
B1	17,000
c	12,700
T	4,500
T1	4,500

MANUFACTURER	ABC

INTERCHANGE	
ASAHI	UC 203
SNR	UC203G2
SLB	UC 203
FYH	UC 203
NTN	UC 203 D1