UC 307 ABC

Insert bearings

TYPE: Ball bearings, Radial insert bearings, Grub screw to inner ring, Spherical outer ring, Seals on both side, R seal, relubrication

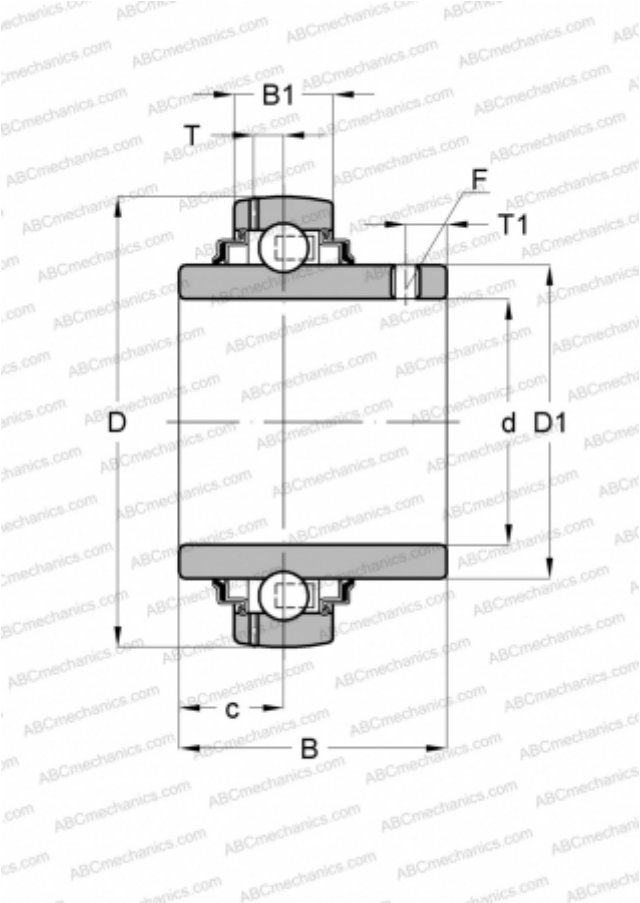

Technical specification

DIMENSIONS, MM	
d	35,000
D	80,000
D1	50,500
B	48,000
B1	25,000
c	19,000
T	7,400
T1	8,000

MANUFACTURER	ABC

INTERCHANGE	
ASAHI	UC 307
SNR	UC307G2
SLB	UC 307
FYH	UC307
NTN	UC 307 D1