LK 211 2F FKL

Insert bearings

TYPE: Ball bearings, Radial insert bearings, With adapter sleeve, Spherical outer ring, Seals on both side, RSR seal, relubrication

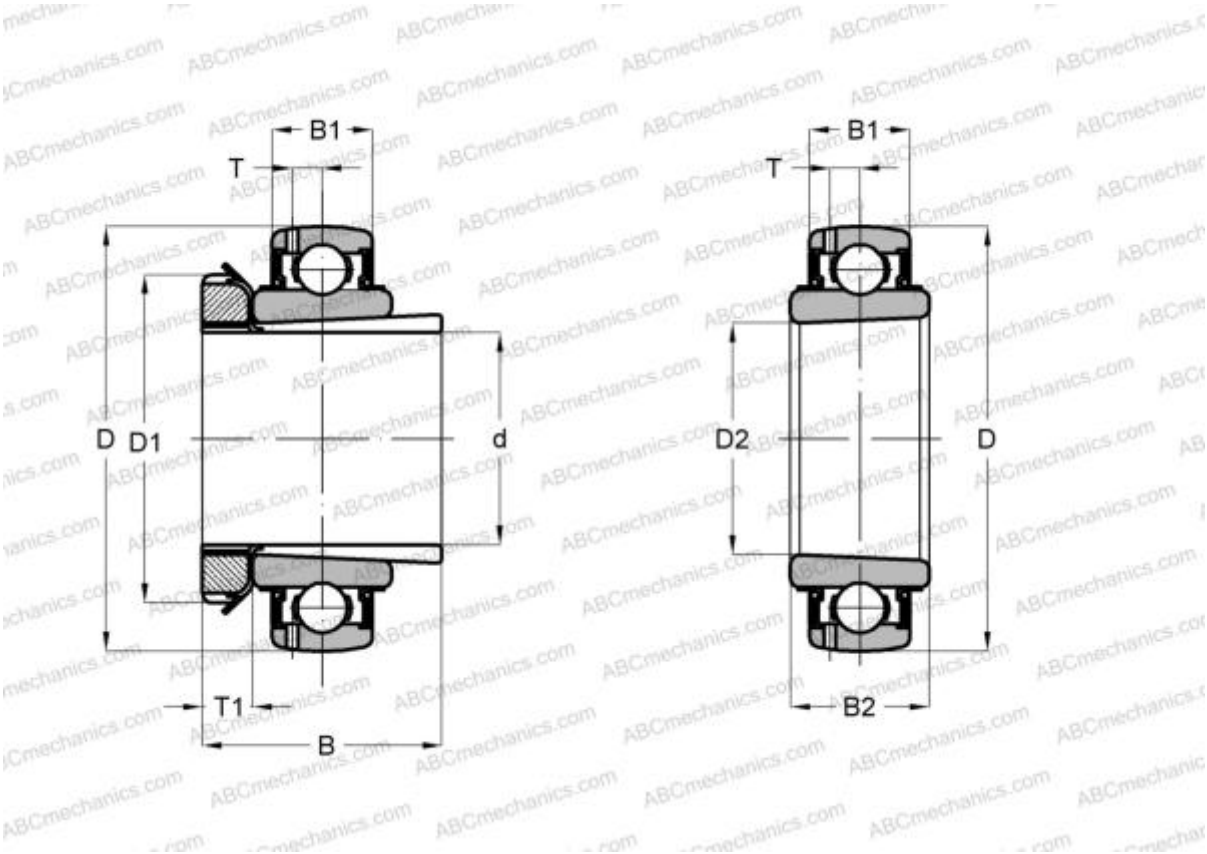

Technical specification

DIMENSIONS, MM	
d	50,000
D	100,000
D1	75,000
D2	55,000
B	59,000
B1	24,000
B2	33,000
T	7,300
T1	12,000

MANUFACTURER	FKL

INTERCHANGE	
ABC	UK 211 + H2311
SKF	YSA 211-2FK
ASAHI	UK 211 + H2311

INTERCHANGE	
SNR	UK211+H
SLB	UK211
FYH	UK 211
NTN	UK 211 D1