US201G2 SNR

Insert bearings

TYPE: Ball bearings, Radial insert bearings, Grub screw to inner ring, Spherical outer ring, Seals on both side, P seal, relubrication

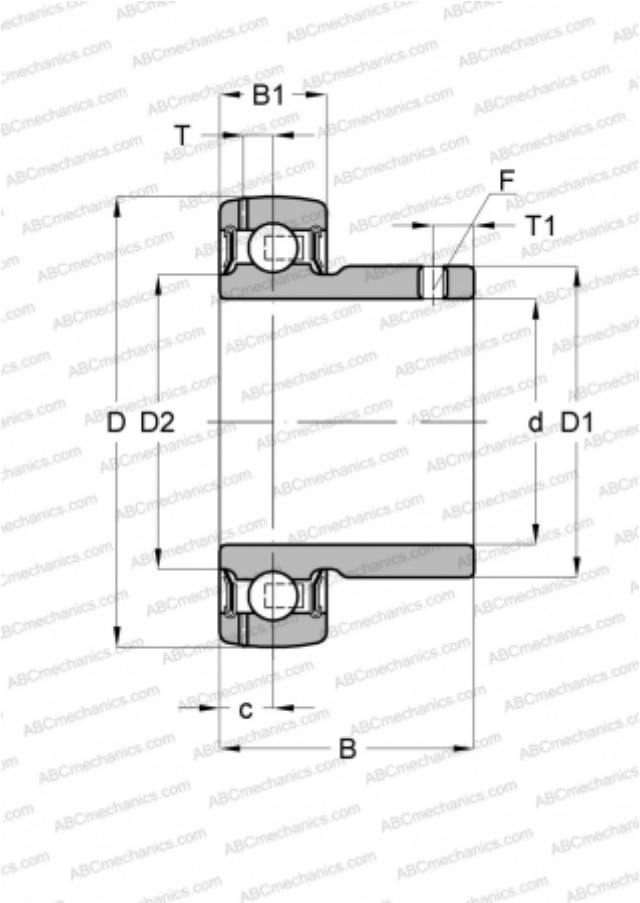

Technical specification

DIMENSIONS, MM	
d	12,000
D	40,000
D1	24,600
B	22,000
B1	12,000
c	6,000
T	3,600
T1	4,000
F	M5x0.8

MANUFACTURER	SNR

INTERCHANGE	
ABC	GAY12-NPP-B
ASAHI	B 1
INA	GAY12-NPP-B
SLB	SB 201
FYH	SB 201
NTN	AS 201

CALCULATION DATA	
Basic dynamic load rating, C	9,550 kN
Basic static load rating, Co	4,780 kN
Operating temperature min	-20 °C
Operating temperature max	110 °C