GRW275 SKF

Angular contact ball bearings

TYPE: Ball bearings, Angular contact ball bearing, Double row, Hub bearing (unit), Generation 1

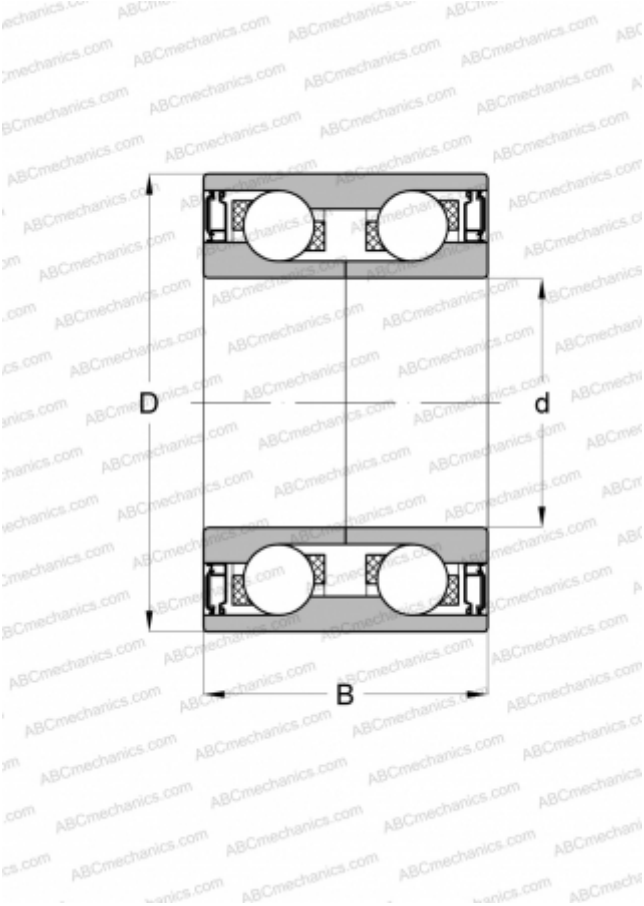

Technical specification

DIMENSIONS, MM	
d	25,000
D	52,000
B	37,000

MANUFACTURER	SKF

INTERCHANGE	
FAG	546467
OEM	94535214
FEDERAL-MOGU L	516012
TIMKEN	WB000022