PHG C68 SKF

Wrapped classical belt

TYPE: V- belts, Classical, Wrapped, Section 22/C (SKF)

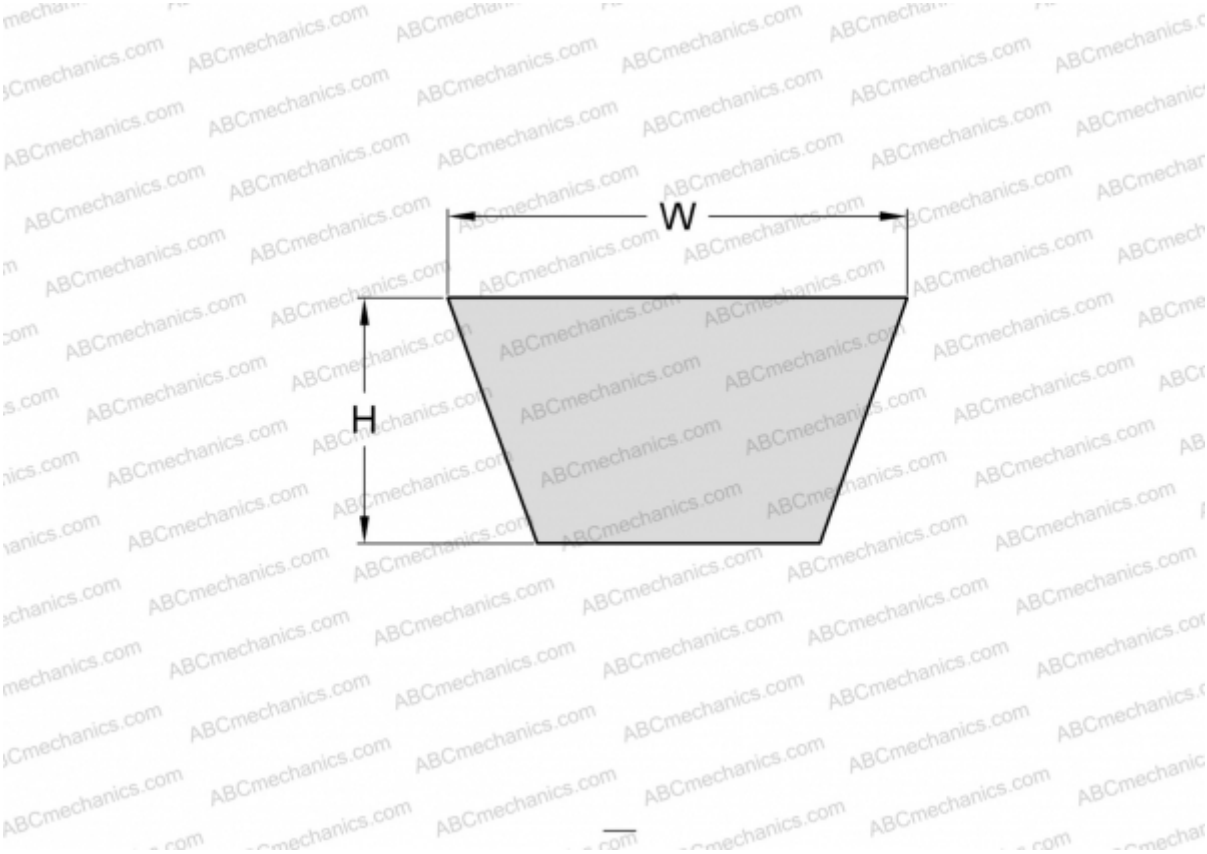

Technical specification

DIMENSIONS, MM	
Estimated length	1780,000
Inner length	1727,000
Width, W	14,000
Height, H	22,000

MANUFACTURER	SKF