# PHG 5V1600 SKF

Wrapped narrow wedge belt

TYPE: V- belts, Narrow, Standart ANSI (USA), Section 5V/15N (SKF)

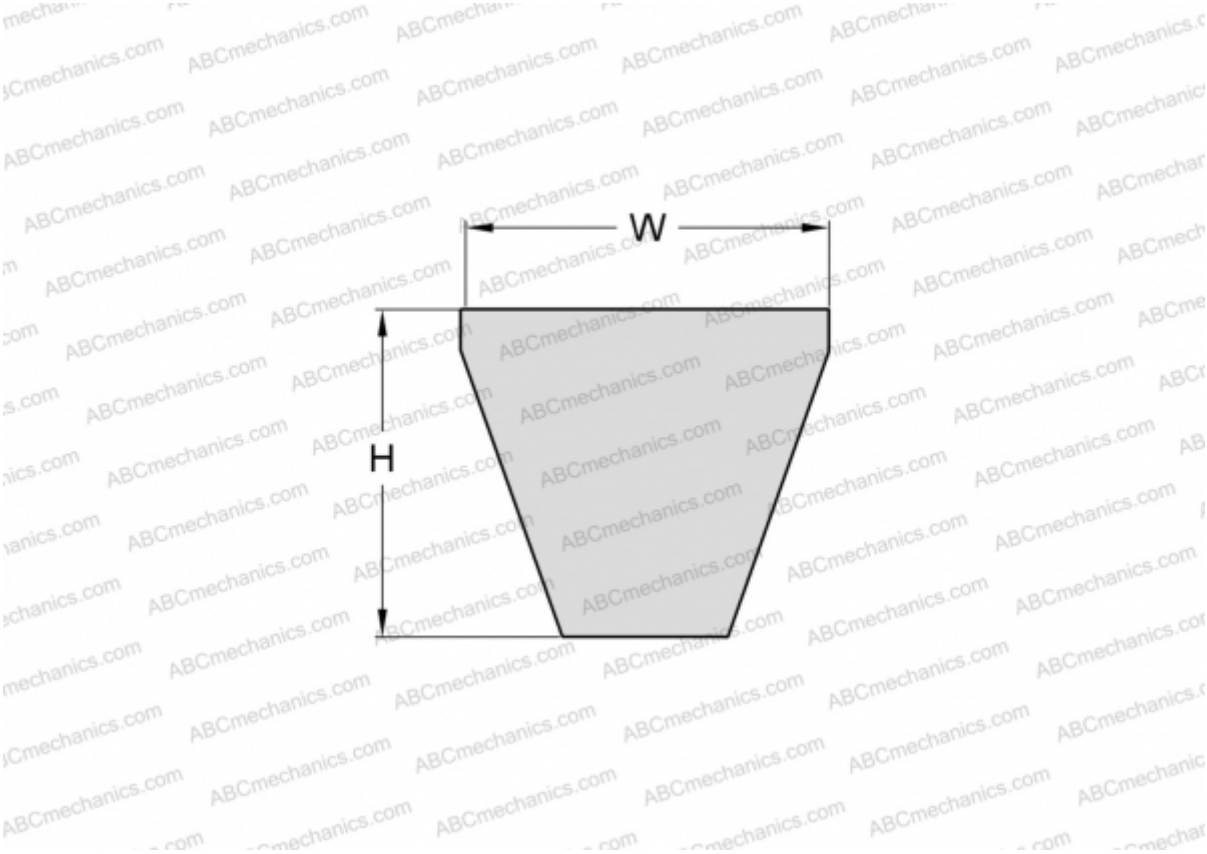


## Technical specification

| DIMENSIONS, MM | |
|---|---|
| Estimated length | 4064,000 |
| Width, W | 15,000 |
| Height, H | 13,000 |

| | |
|---|---|
| **MANUFACTURER** | SKF |