PHC M112S200X10FT SKF

Conveyor chain

TYPE: Conveyor chain, Type M, roller (SKF)

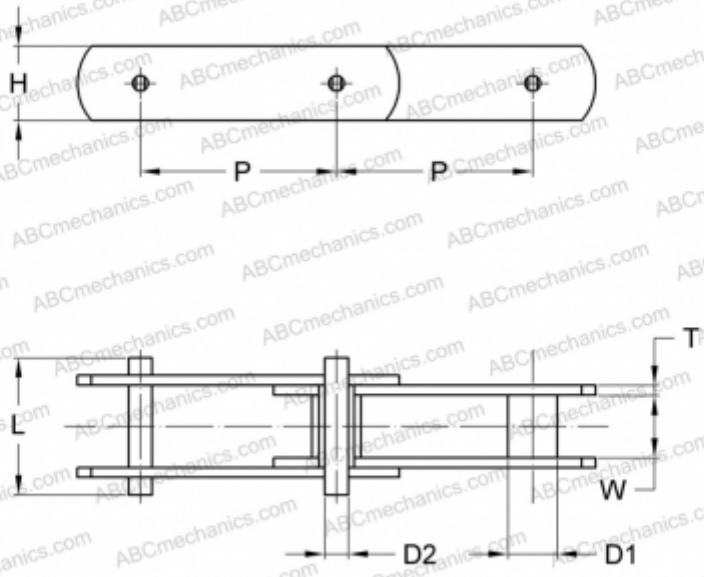

Technical specification

DIMENSIONS, MM	
P	200,000
D1	21,000
W	32,000
D2	15,000
H	41,000
T	6,000
L	73,000

MANUFACTURER	SKF
DESIGNATION BS/ISO:	M112S