PHC 3939-B40X10FT SKF

Conveyor chain

TYPE: Conveyor chains for special use, Lumber mill series, Series 3939 (SKF)

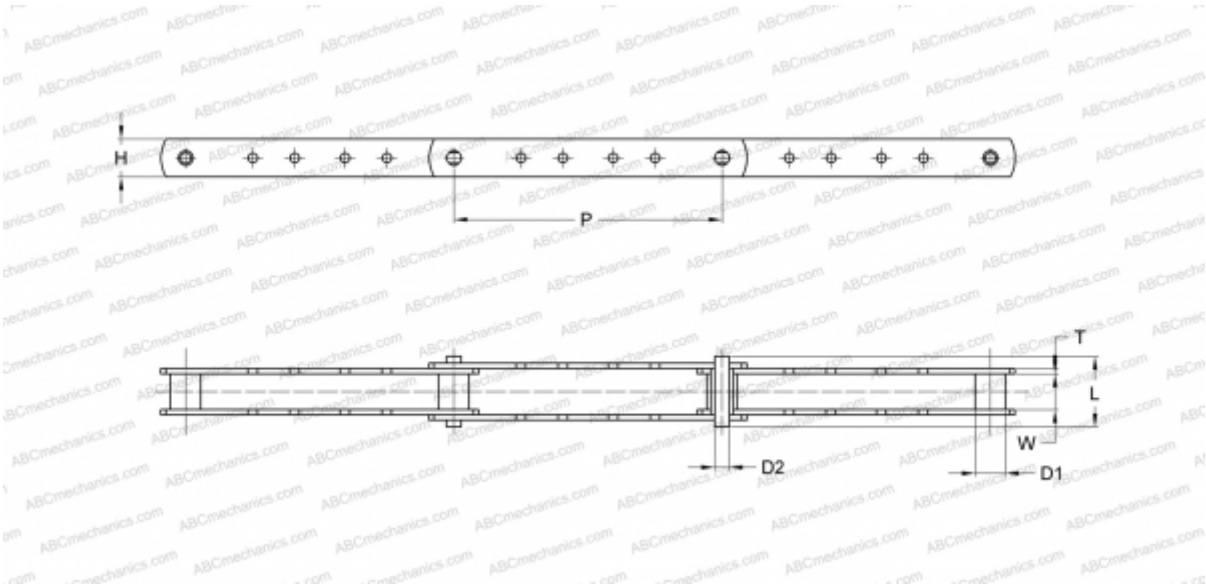

Technical specification

DIMENSIONS, MM	
P	203,200
D1	23,000
W	27,000
D2	11,100
H	28,580
T	4,000
L	49,000
WEIGHT, KG/M	2,450
MANUFACTURER	SKF
DESIGNATION BS/ISO:	3939-B40