PHC 2040X5M SKF

Double Pitch Roller Chain

TYPE: Drive roller chain, Double pitch chain conveyor series, SKF

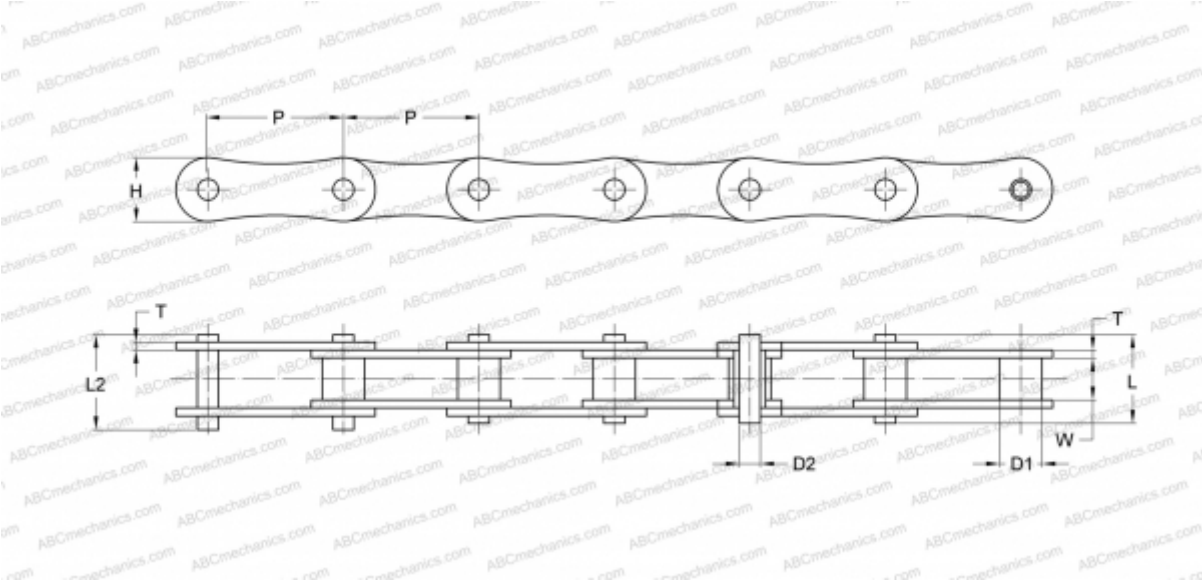

Technical specification

DIMENSIONS, MM	
P	25,400
D1	7,950
W	7,850
D2	3,960
H	12,000
T	1,500
L	16,600
L2	17,800
WEIGHT, KG/M	0,420
MANUFACTURER	SKF
DESIGNATION BS/ISO:	208A
DESIGNATION ANSI:	2040