PHC 2080X5M SKF

Double Pitch Roller Chain

TYPE: Drive roller chain, Double pitch chain conveyor series, SKF

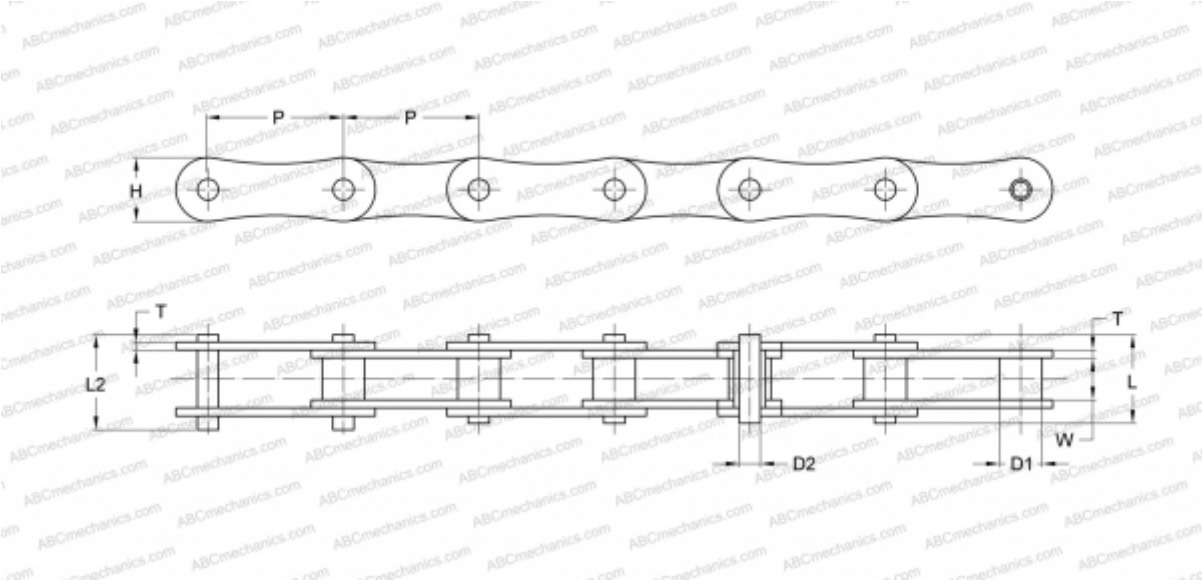

Technical specification

DIMENSIONS, MM	
P	50,800
D1	15,880
W	15,750
D2	7,920
H	24,000
T	3,250
L	16,600
L2	17,800
WEIGHT, KG/M	1,700
MANUFACTURER	SKF
DESIGNATION BS/ISO:	216A
DESIGNATION ANSI:	2080