PHC 208BX10FT SKF

Double Pitch Roller Chain

TYPE: Drive roller chain, Double pitch chain conveyor series, SKF

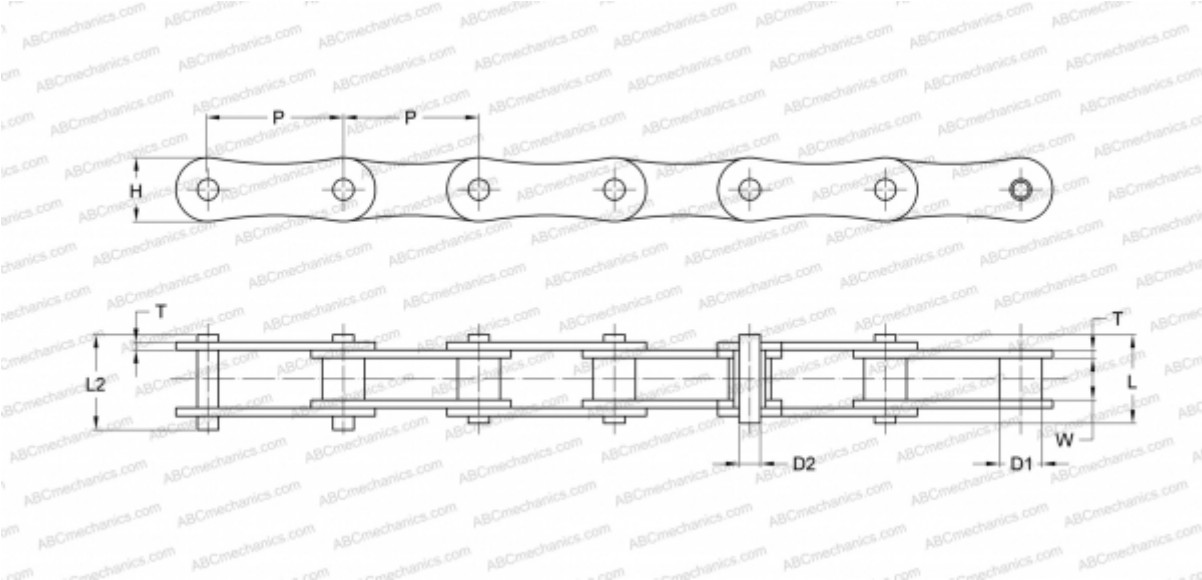

Technical specification

DIMENSIONS, MM	
P	25,400
D1	8,510
W	7,750
D2	4,450
H	11,800
T	1,600
L	16,600
L2	17,800
WEIGHT, KG/M	0,450
MANUFACTURER	SKF
DESIGNATION BS/ISO:	208B