LBD 6 AJ ABC

Linear bushing

TYPE: Shaft guidance systems, Linear bushing, Standard, Adjustable type, Type LBD..AJ

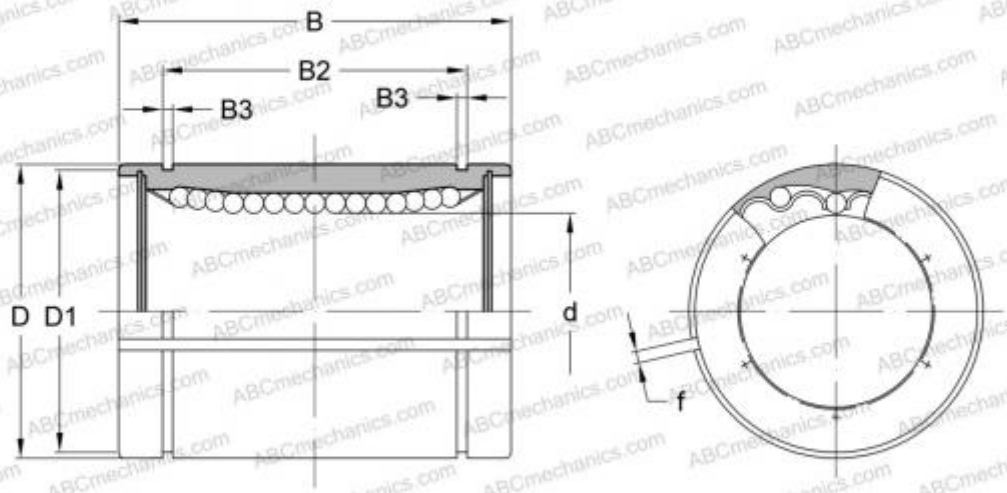

Technical specification

DIMENSIONS, MM	
d	6,000
D	12,000
B	19,000
f	1,500
WEIGHT	0,005
MANUFACTURER	ABC
INTERCHANGE	
IKO	LBD 6 AJ