LBD 10 AJ ABC

Linear bushing

TYPE: Shaft guidance systems, Linear bushing, Standard, Adjustable type, Type LBD..AJ

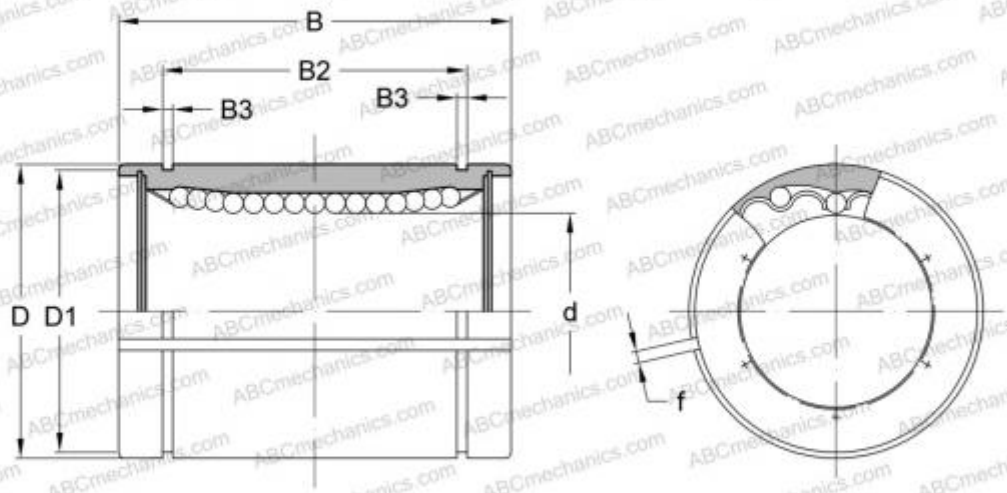

Technical specification

DIMENSIONS, MM	
d	10,000
D	19,000
B	29,000
f	1,500
WEIGHT, KG	0,025
MANUFACTURER	ABC
INTERCHANGE	
IKO	LBD 10 AJ